MC0354

Encode

Encode 2

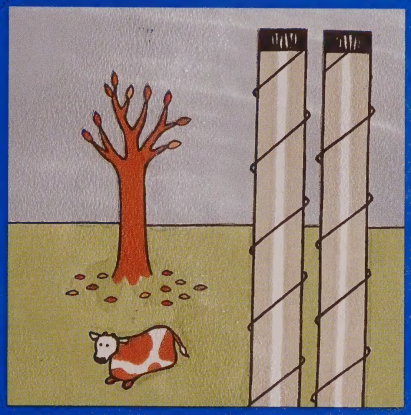

UK Health Departments

NHS Estates

An Executive Agency of the Department of Health

Encode 2

London : HMSO

NHS Estates
An Executive Agency of the Department of Health

Encode 2

London: HMSO

NHS Estates
An Executive Agency of the Department of Health

© Crown copyright 1994
Applications for reproduction should be made to HMSO
First published 1994

ISBN 0 11 321727 7

HMSO

HMSO publications are available from:

HMSO Publications Centre
(Mail, fax and telephone orders only)
PO Box 276, London, SW8 5DT
Telephone orders 071-873 9090
General enquiries 071-873 0011
(queuing system in operation for both numbers)
Fax orders 071-873 8200

HMSO Bookshops
49 High Holborn, London, WC1V 6HB
(counter service only)
071-873 0011 Fax 071-873 8200
258 Broad Street, Birmingham, B1 2HE
021-643 3740 Fax 021-643 6510
33 Wine Street, Bristol, BS1 2BQ
0272 264306 Fax 0272 294515
9–21 Princess Street, Manchester, M60 8AS
061-834 7201 Fax 061-833 0634
16 Arthur Street, Belfast, BT1 4GD
0232 238451 Fax 0232 235401
71 Lothian Road, Edinburgh, EH3 9AZ
031-228 4181 Fax 031-229 2734

HMSO's Accredited Agents
(see Yellow Pages)

and through good booksellers

HMSO
Standing order serice

Placing a standing order with HMSO BOOKS enables a customer to receive future titles in this series automatically as published. This saves the time, trouble and expense of placing individual orders and avoids the problem of knowing when to do so. For details please write to HMSO BOOKS (PC 13A/1), Publications Centre, PO Box 276, London SW8 5DT quoting reference 14.02.020. The standing order service also enables customers to receive automatically as published all material of their choice which additionally saves extensive catalogue research. The scope and selectivity of the service has been extended by new techniques, and there are more than 3,500 classifications to choose from. A special leaflet describing the service in detail may be obtained on request.

About this publication

Encode is a key guidance document which describes how to improve energy efficiency in existing healthcare establishments by means of a comprehensive strategy to facilitate progress from a piecemeal approach to total energy management. It complements the information available from the Energy Efficiency Office. While not mandatory, it will assist greatly in planning an energy-saving campaign.

Encode is published as a set of three documents. This volume, **Encode 2**, provides detailed practical information and technical advice in support of the principles and procedures in Encode 1. Subjects covered include good housekeeping, building fabric, mechanical and electrical services, lighting, heat recovery, building management systems, guidance on refrigerants and finance.

Encode 1 contains information on the Energy Survey and Audit Method (ESAM), energy monitoring, identifying potential energy-saving measures and energy management planning.

A third document, 'A strategic guide to energy management', has been published for general managers and chief executives with the aim of stimulating a management commitment to the principles of energy efficiency and conservation.

The contents of the publication are endorsed by the NHS Management Executive for the NHS in England, the Welsh Office for the NHS in Wales, the Health and Personal Social Services Management Executive in Northern Ireland and the National Health Service in Scotland Management Executive.

NHS Estates
Department of Health
1 Trevelyan Square
Boar Lane,
Leeds LS1 6AE

Estates Services Directorate
HPSS Management Executive
Stoney Road
Dundonald
Belfast BT16 0US
Northern Ireland

Welsh Office
Crown Offices
Cathays Park
Cardiff CF1 3NQ

NHS in Scotland
Management Executive
Estate Division
St Andrews House
Edinburgh EH1 3DG
Scotland

Encode 2

The preface to the 1993 edition of Encode 1, to which this volume is a companion, promoted energy efficiency as a means of releasing resources for improved patient care. It also highlighted the broader environmental aspects of energy conservation and the contribution that can be made to protecting our global heritage by stabilising carbon dioxide (CO_2) emissions as well as reducing the output of other energy-related pollutants.

The bulk of the energy used in the United Kingdom is derived from burning fossil fuels – the balance comes, in the main, from nuclear and hydro-electric sources. Burning fuel in conventional power stations is usually very inefficient. The majority of the energy is discharged to atmosphere as waste heat. The process also releases large quantities of greenhouse gases such as CO_2 and sulphur dioxide (SO_2), the primary cause of acid rain. The major contribution to global warming, some 50%, can be attributed to CO_2 emissions and 80% of the CO_2 comes from burning fossil fuel.

Encode 2 continues this philosophy. The section on fuel purchasing looks at renewable fuel sources and that on refrigeration comments on the ozone-depleting qualities of chlorofluorocarbons (CFCs). This is one of a number of new or expanded sections. Those prepared for in the 1986 edition of Encode 2 are also included.

The emphasis of Encode 2 is on practical energy-efficiency measures, what might be done and how to do it. While many health authorities and NHS trusts employ contract energy management (CEM) and/or facilities management, the nature and scope of such contracts varies considerably, as does the allocation of responsibility. In order to encompass such variations, Encode 2 inevitably covers a wide field but in considerable detail.

The major users of Encode 2 will be those in estates and facilities management, but the importance of the support of general managers and chief executives has not been overlooked. The publication of 'A strategic guide to energy management' for general managers and chief executives had that aim in mind.

Section list

THE CODE

10 Good housekeeping

11 Building services

12 Building fabric

13 Waste heat recovery

14 Ventilation and air-conditioning

15 Heat pumps

16 Combined heat and power (CHP)

17 Water

18 Domestic hot water services (DHWS)

19 Refrigeration

20 Lighting

21 Small power

22 Building and energy management and control systems

23 Laundries

24 Catering

25 Fuel purchasing

26 Investment and finance

Digitized by the Internet Archive
in 2026 with funding from
UCL Library Special Collections

https://archive.org/details/ucl_mc0354

Contents

10.1 Introduction *page 3*

10.5 Management *page 3*
- 10.6 Organisation
- 10.12 Policy
  - 10.14 Room temperatures
  - 10.15 Use of electrical heaters
  - 10.16 Setting controls
  - 10.17 New buildings and upgrading work
  - 10.18 Lighting
  - 10.19 Machinery
  - 10.20 Organisation and responsibility
  - 10.22 Appendices
- 10.23 Energy training and education
  - 10.26 Management training
  - 10.28 Technical training
  - 10.32 Staff training
- 10.35 Motivation
- 10.43 Publicity

10.46 Hospital staff *page 8*
- 10.46 Checklist
  - 10.46 Heating
  - 10.46 Hot and cold water
  - 10.46 Equipment
  - 10.46 Lighting
  - 10.46 Computers and other information technology
  - 10.46 Air-conditioned areas

10.47 Estate organisation and its management *page 8*
- 10.50 Checklists
  - 10.50 Space heating
  - 10.51 Boilerhouse
  - 10.51 Pipework
  - 10.51 Domestic hot water services (DHWS)
  - 10.51 Ventilation and air-conditioning
  - 10.51 Controls
  - 10.52 Lighting
  - 10.53 Equipment
  - 10.54 Laundry
  - 10.54 Kitchens
  - 10.54 Building fabric

10.55 Support and reference material *page 11*

10.0 Good housekeeping

Introduction

10.1 Good housekeeping is the efficient management of resources, in particular of staff and through them of other resources such as buildings, plant and equipment. Quite often, good housekeeping measures involve little or no additional capital expenditure and can be very cost-effective.

10.2 Good housekeeping measures usually begin to produce savings as soon as they are implemented but, to sustain their useful effect, continued awareness from both management and staff is required. Good housekeeping is arguably the most "visible" of energy-saving initiatives and optimum presentation is important. Measures should be accurate, timely, meaningful and consistent over time.

10.3 Good housekeeping measures consist of:

a. promoting energy efficiency and other environmentally friendly initiatives within the estate in the NHS, amongst staff, patients and visitors;

b. informing and training staff as to what is being done and what more can be done, why it is beneficial and how they can help promote activities which benefit both the hospital and the environment;

c. establishing the procurement and pattern of energy and water use, monitoring performance and identifying the opportunities for reducing consumption and the overall cost without debasing quality of service;

d. ensuring that plant and equipment are operated at optimum efficiency, that operating performance is regularly checked and that a good standard of maintenance is established;

e. ensuring, where plant and equipment has reached a point in its life where its peak efficiency is questionable, that an option appraisal report is prepared and its conclusions forwarded to management for their analysis. The Encost computer program can be useful here (see Encode 1, Section 6).

10.4 This section is grouped under three main headings, the second and third being presented mainly as checklists of measures:

a. management;

b. hospital staff;

c. works organisation and its management.

Management

10.5 Management is most likely to succeed if members of staff are encouraged and motivated by active and pro-active leadership, the aim of which is first to apply and adhere to energy-saving initiatives and measures.

Organisation

10.6 It is important to give a senior member of staff responsibility for energy efficiency, and to ensure that a scheduled proportion of his/her time is spent exclusively on energy issues. This applies whether or not outside assistance such as contract energy management (CEM) and/or facilities management is employed.

10.7 The establishment of good standards of inspection and maintenance for the building fabric, the heating and mechanical plant, the controls and lighting are all important. Clear lines of responsibility for this work should be set. In this regard it is important that all members of staff should:

a. understand their own individual responsibilities;

b. receive appropriate training in order to work effectively;

c. be accountable.

10.8 Regular systems of review and record-keeping to monitor progress should be established (see Encode 1, Section 2). Consideration should be given to installing an energy or building management system (BMS) or improving the existing installation and, where possible, linking these to the monitoring and targeting system. A computer-based system, such as the 'Energy Monitoring and Targeting System' (Enmats) is useful here (see Encode 1, Section 6).

10.9 When re-organising departments, such as in a space-utilisation exercise which in itself has the potential for considerable energy saving, the aim should be to group together areas that are occupied only during the day (for example physiotherapy, pharmacy, pathology and administrative offices). This makes it feasible to use optimum start and zone controls to supply heating only when areas are occupied.

10.10 Advantage should be taken of off-peak electrical tariffs and attention paid to minimising the maximum demand (MD). Consideration should be given to pool price purchasing, and also to methods of smoothing excess peak electrical loads by re-timing the use of high-energy-

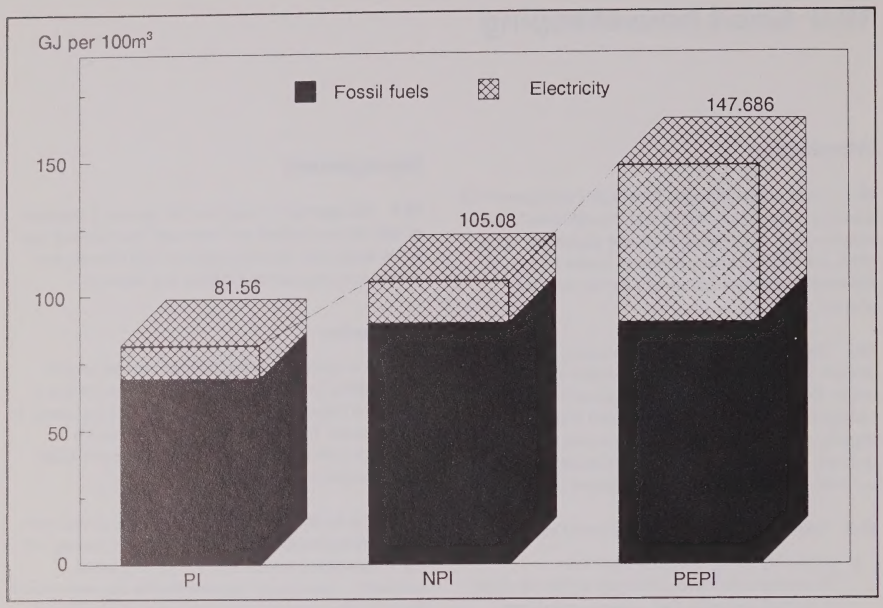

Figure 33 Performance indicators in GJ per 100 m³ for fossil fuels and electricity (England) 1990/91

consuming equipment. This is particularly appropriate to ventilation loads and the semi-industrial processes in catering etc.

10.11 Publicity campaigns should be established and maintained in order to promote energy awareness. The involvement of staff at all levels, particularly top management and departmental managers, should be secured, including the medical and nursing staff in charge of a departmental function, for example the X-ray sister.

Policy

10.12 In order to demonstrate the hospital management's commitment to energy efficiency, an energy policy statement should be prepared for issue to all staff. The following synopsis is based on a policy statement prepared for the NHS and can be adjusted to suit local circumstances:

a. status of the document: amendments will be proposed through the individual(s) responsible for energy and estate management, but will be endorsed by the management team prior to implementation;

b. distribution: heads of department should make sure that staff are aware of the policy;

c. potential savings and strategy: establish the potential for energy saving within the authority and at local level, and set targets (for example, a reduction of 15% in energy consumption over the five years 1991/92 to 1995/96 as proposed by the Government, or in Scotland a 1.5% to 2% volume reduction each year to the year 2000).

10.13 The strategy should also set out the types of measure, priority buildings or services, training, and publicity and investment.

Room temperatures

10.14 Room temperature standards relate to environmental design conditions and are given in various Health Building Notes (HBNs), Health Technical Memoranda (HTMs) and Activity DataBase (ADB) sheets (in Scotland, Scottish Hospital Planning Notes (SHPNs) and ADB sheets) as appropriate. These data should be taken as guidance and should not be used for operational values without regard to the accommodation standards and the form of heating or cooling used within each unit of accommodation.

Use of electrical heaters

10.15 These are usually operationally expensive and their use should be eliminated wherever possible. Where the

power is derived from fossil-fuelled centrally generated electricity it is considerably more damaging to the environment than locally burning the equivalent fossil fuel. It also seriously degrades the Primary Energy Performance Indicator (PEPI) (see Figure 33).

Setting controls

10.16 Generally, controls should be altered only with the authority of the officer with financial liability. Locally operable controls, such as room thermostats or radiator valves designed for adjustment by an occupant, should be kept to an absolute minimum.

New buildings and upgrading work

10.17 A "lowest whole-life cost" policy should be implemented using discounted cash flow, which takes energy costs fully into account. The Benefit Cost Ratio (BCR) method as recommended by the Treasury and used in Encost (see Encode 1, Section 6) is favoured. HBNs and HTMs (in Scotland, SHPNs) should be employed to set locally acceptable minimum standards for design to which in-house design staff and consultants must conform.

Lighting

10.18 Every department should make practical arrangements to ensure that lighting is not used unnecessarily. Lighting standards are given in the Chartered Institution of Building Services Engineers (CIBSE) 'Lighting Guide LG02, Hospitals and health care buildings', and 'Lighting Guide LG03, Areas for visual display terminals' and in HBNs and HTMs (in Scotland, SHPNs) as appropriate. Energy-efficient lighting is acceptable for many activities. See Section 20.

Machinery

10.19 Before purchasing energy-consuming machinery of any size, those responsible for estate or energy management should comment on its energy efficiency and safety and should make practical arrangements to ensure against unnecessary use. Photocopying machines, computers and machinery under the control of individual departments should be included in these arrangements. The proliferation of small equipment, for example hand driers and vending machines, can have a very serious impact on both electrical consumption and MD charges.

Organisation and responsibility

10.20 Each authority, hospital or NHS trust should establish an energy committee to review energy usage. It should include members from the administration, estates and other departments as necessary, and report to senior management. It is essential that all staff are regularly reminded that they have a duty to help prevent energy wastage – a spirit of "ownership" should be encouraged.

10.21 Increasingly, hospitals are moving towards functional accountability where all department heads are directly responsible for their use of energy. This is particularly important in areas such as catering and laundries, where the control of energy, especially electricity, is of paramount concern.

Appendices

10.22 These can be used to attach detailed information to the energy policy statement. Examples are requirements for room temperatures, the wording to be used in circulars advising of the intention to reduce overheating by the introduction of new controls and lighting standards, and advice on lamp selection and replacement.

Energy training and education

10.23 The success of energy-efficiency measures relies heavily on a motivated staff who understand the needs and problems and are aware of the remedies that can be applied.

10.24 Management should promote the development of participative training programmes for individuals and groups within the organisation who are involved with the use of energy. Management should ensure that these programmes are followed by sustained campaigns to hold the interest and enthusiasm of the trained staff.

10.25 The principal areas of training can be grouped as management training, technical training and staff training.

Management training

10.26 Every aspect of hospital life is dependent on energy (light, heat, ventilation, water and power). The responsibility of management (senior, middle and junior) for the assets and resources entrusted to them emphasises the necessity for them to be familiar with the cost and use of energy, targets and accountability.

10.27 A number of specialist companies and consultants design training courses and seminars catering for specific needs.

Technical training

10.28 While all competent engineers have learned the use and control of energy, fast-moving energy technology and developments in its use have created a fundamental need for management to ensure that they are kept up to date.

10.29 There are numerous courses available, ranging from a diploma in energy, to science degrees in environmental engineering, to short practical courses offered by professional and technical bodies to their members (and the public at large) covering a very wide

range of the latest energy-efficiency measures and developments. Management should be aware of these courses and encourage professional and technical staff to attend.

10.30 There is also a variety of background courses, covering a more general field but providing basic guidelines, which attenders can take further on either a formal or an informal basis.

10.31 Details of these courses can be obtained through the Energy Efficiency Office publication, 'Training for Energy Efficiency'.

Staff training

10.32 Good housekeeping is one of the most important elements of training for staff and should be aimed at all members of the organisation. Its aim is to create an awareness of the cost of energy consumed and the savings that can be made as a result of their individual efforts.

10.33 Management should ensure that the training programme adopted is repeated at regular intervals to maintain awareness.

10.34 Training can be achieved by:

a. on-site training sessions and seminars for key personnel, for example theatre managers, boilerhouse operators etc. Seminars can help to identify and overcome previously unrecognised obstacles and highlight the benefits to be gained by more specialist training for some staff;

b. nominating energy wardens to each ward/ department and developing an energy checklist for them;

c. inclusion of energy saving in all standard training;

d. giving time to the individual responsible for energy management in induction courses and procedures;

e. encouraging staff to make use of open-tech and other training courses.

Motivation

10.35 The control of a substantial degree of energy consumption is in the hands of individual users, and staff motivation is of vital importance.

10.36 It should be stressed that resources are at a premium and that savings in energy can, and should, mean a direct improvement in resources available for patient care.

10.37 The commitment and cooperation of management in energy-saving schemes is essential. Most successful schemes use group problem-solving techniques.

10.38 The following list outlines what have been found to be essential elements in successfully motivating people:

a. set an achievable goal for all;

b. set out clearly the means of achieving the goal;

c. present information in a form that is relevant to personnel, for example equate the cost of heating to doctors' and nurses' salaries or to the cost of running a theatre (see "Publicity" below);

d. ensure regular assessment so that people know how well they are doing. Be generous in praising achievements and sympathetic in recognising failings;

e. encourage feedback (why an initiative is going particularly badly or particularly well);

f. involve all the relevant people and aim to create an environment where all staff will wish to be involved;

g. provide incentives or rewards. Rewards can be targeted at staff, social concerns or patients needs, such as the purchasing of a piece of equipment when an appropriate saving has been achieved. Simply the public recognition from senior management that a job has been well done and the hospital has benefited by the combined efforts of the staff will be reward in itself.

10.39 Projects can lose impetus when staff attention is diverted and when organisers themselves lose enthusiasm. It is advisable to plan for this contingency by giving different members of staff responsibility for specific periods of time or by bringing in outside help.

10.40 Projects may also risk curtailment because they are perceived as diverting attention from new projects. Energy managers should look for ways in which schemes can be integrated into the established system and use existing networks of communication, for example by fitting energy conservation into general training programmes and using existing groupings for the purpose of staff discussions.

10.41 Those responsible for energy management should also beware of overkill and should strike a balance between the necessary amount of showmanship required to promote and publicise new programmes, and the vital but routine attention which must continue to be given to established energy-saving measures.

10.42 The long-term objective behind all efforts to motivate staff to help the environment and to save energy should be a gradual but radical change. It is important to change both attitudes and wasteful habits, so that prudent use of resources eventually becomes an instinctive part of everyday behaviour.

Publicity

10.43 Those responsible for energy management should use publicity to increase staff awareness and to explain what is being done to conserve energy and what staff can do to help further.

10.44 Publicity should build on what has already been done and should repeat advice already given. It is all too easy to fall back into bad habits. Periodic emphasis on particular points through newsletters, worksheets, stickers, posters etc, supported by regular monitoring and publication of results achieved, usually proves effective in maintaining interest and motivation. Consideration should be given to:

a. developing a checklist of measures for each department, possibly to be implemented by an energy warden within the department;

b. encouraging staff to suggest energy-saving ideas and to report defects that detract from energy saving, for example dripping taps, faulty thermostats, worn draught-stripping;

c. portering staff who work throughout a hospital visiting all departments, and areas such as lobbies, corridors etc, with no direct departmental responsibility. They are in a unique position to effect and encourage good housekeeping measures. Publicity and information could therefore be developed specifically for porters;

d. publicity material and checklists prepared for other staff groupings, for example:
   (i) laundry and kitchen staff on turning off equipment and using full loads in machines;
   (ii) domestic assistants on turning off lights in unoccupied rooms, using lights in unoccupied rooms only when they are being cleaned, using hot water sparingly;
   (iii) junior medical and nursing staff in living accommodation on turning off heat and lights when rooms are empty, reporting dripping taps, using radiator controls to save on room heating;

e. developing publicity material, for example:
   (i) posters and point-of-waste stickers;
   (ii) newsletters and internal newspapers;
   (iii) energy bulletins;
   (iv) possibly using local hospital radio programmes for the purposes of general energy-saving suggestions (for example, reminders to close windows in cold weather);

f. checking with other energy managers through local or national fora on ideas on publicity materials which have proved effective in practice.

10.45 The following ideas were taken from NHS newsletters, internal newspapers and energy bulletins:

a. posters and point-of-waste stickers. Posters are available from the Energy Efficiency Office. Alternatively, posters on local themes could be prepared, for example "an entrance door open six hours a day during the winter costs as much as two staff" etc. A "design an energy poster" competition in a children's ward could prove very effective in involving hospital staff and patients;

b. cartoons exhorting people to switch off lights etc and/or showing costs of wasted energy expressed in terms of staff costs or costs of running essential services. These are particularly effective if adapted to local circumstances;

c. pie-charts and other diagrams. It is useful to show general energy costs and potential savings, for example:
   (i) total energy costs for a group of hospitals or one in particular, broken down into fuel and water usage with potential for savings for each utility. This publicity would be aimed at all hospital staff;
   (ii) individual fuel and water bills for hospitals compared with typical domestic heating bills, that is, how many houses could be lit or heated for the same cost as a hospital. This publicity would be aimed at all hospital staff;
   (iii) bold statements such as "In a cold week we use a tanker full of oil!", "Each light costs £10 to £20 to run depending on use!" and "The energy cost for this hospital is £*x* a minute!";

d. league tables comparing different hospital or departmental performance in terms of energy saving. Showing how each unit is achieving its energy-saving targets can create healthy competition and achieve remarkable results;

e. questionnaires which both spread information and collect ideas for achieving energy saving. Carefully designed, they can also heighten staff awareness of energy efficiency;

f. videos can be a useful source of information on energy saving, especially during regular management meetings that may not be specifically about energy waste. 'A matter of conscience' is a 15-minute video, produced some years ago, especially to highlight the principles of good housekeeping in a large and rather old hospital. Its fundamental message is just as important today. It remains a useful tool for induction training courses, for group and other staff meetings and for the guidance of peripatetic staff (see paragraph 10.44c).

Hospital staff

Checklist

10.46 The following checklist of good housekeeping measures is appropriate to all hospital staff:

Heating

a. report areas that are persistently overheated;

b. avoid the use of supplementary electric heaters;

c. keep windows and doors closed when the heating is on;

d. close blinds and curtains before sunset;

e. keep windows and doors closed in cold weather;

Hot and cold water

a. report dripping taps (finding out in advance to whom to report them);

b. do not waste water. Wasting hot water wastes both energy and water, and water is a resource that has to be paid for;

Equipment

a. turn equipment off when not in use;

b. in laundries, operate equipment only with full loads;

c. in kitchens, operate dishwashers and ovens only with full loads and keep refrigerator doors closed;

Lighting

a. do not leave lights on in unoccupied areas;

b. do not switch on all the lights when only a few are needed. Report when such local control is not possible (that is, report any areas where there is a lack of switching);

c. when daylight is adequate, switch off lights near windows;

d. ensure that someone is responsible for switching off lights after hours;

Computers and other information technology

a. never touch unfamiliar systems;

b. become familiar with the systems used, and act accordingly;

c. always seek guidance from the appropriate information technology (IT) systems support unit when unsure;

d. do not switch on machines (computers, laser printers etc) until needed. Where machines and networks are required to be run throughout the day, it may be possible to switch off the visual display unit (VDU) screen when not needed. Other, totally independent stand-alone personal computers (PCs) should be switched on only when required;

e. switch off machines which are not going to be used for some time (an hour or more). This particularly applies to stand-alone machines, those which do not have to be powered-down after every period of use and laser printers. It is important to know the constraints relative to each machine;

f. consider the use of shared laser printers via networks or "T"- or multi-channel switches;

g. switch off all terminals, stand-alone processors and laser printers at the end of each day;

Air-conditioned areas

a. to avoid overloading the air-conditioning, close curtains and lower and angle blinds when the sun is shining, but not to the detriment of adequate levels of illumination. Keep the use of lights and equipment to a minimum;

b. avoid the use of supplementary heaters (staff may need to be told when an area is air-conditioned);

c. avoid overcooling. Virtually all refrigeration is powered by electricity, the most costly and environmentally damaging fuel.

Estate organisation and its management

10.47 These measures have been grouped under the different types of plant and equipment in the day-to-day control of the works organisation, for example boiler room, controls, lighting etc.

10.48 Those responsible for energy management should set up a programme for discussion groups to explain and agree what good housekeeping measures could be introduced. They should work through established consultative channels and encourage suggestions.

10.49 While it is management's responsibility to instigate and promote good housekeeping measures, it is through a dedicated staff that the potential savings will be fully realised.

Checklists

10.50 The following checklists also include some good housekeeping measures that should be carried out by all hospital staff and which were listed together previously.

They are listed here under the various works and maintenance headings as a reminder.

Space heating

a. ensure that the heating system is shut down in the summer, especially in areas occupied only during the day;

b. when upgrading/modernisation work is planned, consider the use of optimisers or time-switched zone controls to enable areas unoccupied at night to have a reduced heating standard (subject to providing frost protection and suitable warm-up time). Large savings are possible if areas which are only occupied during the day can be grouped into zones;

c. restrict the use of supplementary electric heaters. Investigate the use of any wasteful supplementary heating and aim to obviate its use, for example by changing thermostat settings, cutting out draughts or improving the primary heat source;

d. encourage staff to turn off radiators rather than open windows;

e. encourage staff to report areas that are persistently overheated, and follow up by checking the thermostat settings and balancing heat emitters.

Boilerhouse

10.51 Saving money in the boilerhouse is a matter of small investment and carefully observed routine (see also the references to the Energy Efficiency Office 'Fuel efficiency booklets' in the Section 11 Support and reference material). A checklist for the boilerhouse is as follows:

a. ensure that the boilers are working at optimum efficiency. This is probably the most important good housekeeping measure of all;

b. the following checks and maintenance work should be carried out regularly to an agreed timetable:
   (i) test boiler combustion efficiency to optimise fuel/air ratio;
   (ii) check that supply oil for combustion is at the correct temperature and pressure;
   (iii) control firing to avoid unnecessary blowdown;
   (iv) clean tubes and other heat-exchange surfaces and keep them in good repair;
   (v) monitor the oxygen (O_2) content of waste gases and the flue gas temperature. By regular testing it can be calculated when scale deposits will begin to impair heat transfer and it is time for a clean;
   (vi) check that flues are not obstructed and have a proper draught;
   (vii) service pumps, controls and firing equipment to prevent breakdowns and inefficiency;
   (viii) maintain steam traps;
   (ix) clean filters;
   (x) ensure that total dissolved solids (TDS) are controlled within manufacturers' limits;

c. treat feedwater to minimise build-up of scale;

d. consider the introduction of modern burner controls and the potential for heat recovery;

e. select boilers to work at optimum load. Boilers are at their most efficient when operating at or near to their rated output;

f. check that steam pressures are not higher than they need be;

g. aim to adjust the demand for steam to ensure an even loading on the boiler;

h. train boiler operators and engineering staff;

Pipework

a. check that all pipework is insulated to current economic standards;

b. check the condition of insulation regularly where exposed to the weather or liable to damage;

Domestic hot water services (DHWS)

a. encourage staff to report dripping taps;

b. insulate calorifiers and check for leaks;

c. record and analyse hot water demand and location of draw-off points. Future upgrading and rationalisation of services may be able to take advantage of overnight shutdown or replacement of long main runs to isolated draw-off points, for example with local water heaters;

d. check water temperature for excessive draw-off before temperature is reached;

e. **the measures must be consistent with microbiological control requirements. See HTM 2040, 'The control of legionellae in healthcare premises – a code of practice';**

Ventilation and air-conditioning

a. encourage staff to keep windows and doors closed. Publicise energy costs of open windows and doors;

b. encourage staff to use blinds and curtains in sunny weather to minimise the need for air-conditioning;

c. check that ventilation rates are not excessive and comply with HBN and HTM standards. Whenever possible, reduce fan capacity;

d. switch off or reduce the speed of air-conditioning fans when areas are not in use;

e. regularly inspect ducting for air leaks and seal them;

f. agree a regular maintenance programme for the air-conditioning plant, including:

   (i) cleaning and lubricating fans;

   (ii) cleaning or replacing filters;

   (iii) checking controls for moisture content, temperature and air flow;

g. ensure that cooling and preheating do not take place together;

h. investigate the potential for recirculation of air. This will be possible only where there is no risk of cross-infection from the spread of airborne infections. Several hospital areas are suitable for recirculation, for example therapy areas, most non-clinical departments and some ward accommodation;

j. consider the introduction of a heat recovery system;

Controls

a. check temperature control settings regularly and recalibrate if necessary. The cost of checking and adjustment of controls is very low and almost always gives high returns. An energy management system or BMS makes the job of checking controls much easier and permits prompt corrective action;

b. organise the controls to take advantage of solar and other beneficial heat gains. A study of a Nucleus hospital multi-bed room showed that a south-facing ward needed 22% less space-heating energy than a north-facing ward. Consider adding thermostatic radiator valves or zone thermostats to take advantage of such potential savings;

c. aim to control the heating, ventilation and lighting systems in continuously occupied areas separately from the systems in those areas occupied only during the day;

d. consider adding a night set-back facility in continuously occupied areas;

e. consider shutting down the heating system during non-working hours, subject to providing frost protection and optimum-start control equipment, in areas occupied only during the day;

f. when renewing controls, choose the simplest system compatible with the size and complexity of building;

g. consider the use of lockable controls where appropriate.

Lighting

10.52 Section 20 deals in detail with the opportunities for the efficient use of lighting. Some of the easier good housekeeping habits include:

a. do not leave lights on in unoccupied areas;

b. do not switch on all the lights when only a few are needed;

c. site workplaces needing most light nearest to windows or rooflights;

d. keep rooflights and light fittings clean;

e. check that lighting levels are not excessive;

f. when areas are being upgraded or modernised, the following good housekeeping points should be noted:

   (i) decorate with light colours and furnishings to reflect light;

   (ii) aim to achieve lighting economy by providing a low level of general lighting combined with task lighting;

   (iii) use high-efficiency lamps with a good power factor;

   (iv) arrange light switching so that unwanted lighting can be switched off, for example separate switching for perimeter lighting;

   (v) use directional shades, reflectors and diffusers;

   (vi) make sure switches are conveniently placed;

   (vii) consider adding switches in areas where there are too few switches controlling lights;

g. consider the possible benefits of automatic lighting controls;

h. allocate responsibility to someone to switch off unused lights after hours in intermittently occupied areas.

Equipment

10.53 An often forgotten but obvious rule is "Do not leave equipment on when not in use".

10.54 The services to sterilizers should be maintained for 24 hours a day. Turning them off overnight causes processing problems when services are restored and no economic savings are achieved. Detailed operational guidance on sterilizers is given in HTM 2010, 'Sterilization' (in preparation).

Laundry

a. operate equipment only with full loads;

b. consider opportunities for heat recovery;

c. switch off equipment when not in use;

d. ensure that equipment is regularly maintained.

Kitchens

a. operate dishwashers and ovens only with full loads;

b. train staff in hot-water economy measures. Regular instruction should be given on the correct use of dishwashers and proper cleaning procedures for equipment;

c. regularly service dishwashing equipment on a planned maintenance arrangement;

d. keep refrigerator doors closed and check seals;

e. ensure that refrigerator coils are kept free from dust and frost, have sufficient space for air circulation and are kept away from heat-producing equipment;

f. refrigerated space should be fully utilised. The energy required to cool or freeze a full cabinet is not significantly more than that for one which is partially filled;

g. consider fitting timers to cooking equipment;

h. preheating should not normally require more than 10 to 14 minutes for large ovens and 5 minutes for fryers. Prolonged preheating is wasteful;

j. equipment should be cleaned frequently to remove deposits, scale and corrosion which affect heat transfer;

k. regular servicing is important to ensure that heating elements, burner jets, thermostats, seals, valves and switches are in good working order.

Building fabric

a. ensure that lobby doors close properly and regularly check the self-closing mechanisms to avoid unwanted draughts;

b. check if weather-stripping to windows and doors is worn or inadequate. Keep a stock of replacement weather-stripping in store;

c. add reflective foil behind radiators on external walls. This is cheap and cost-effective;

d. encourage staff to close blinds and curtains before sunset;

e. use sunshading devices to reduce the cooling load in areas with air-conditioning;

f. consider what energy-efficiency measures can be incorporated into periodic maintenance and alteration work. It is usually cheaper to carry out insulation and draught-stripping during maintenance rather than as a separate contract, and it involves less disruption to hospital working.

Support and reference material

10.55 *Encode 1*
Encost.
Encomp.

Health Building Notes (HBNs)
Various HBNs (in Scotland, SHPNs) contain standards, in particular:
Hospital accommodation for children (HBN 23). DHSS, HMSO, 1984. ISBN 0113208189.
Hospital accommodation for elderly people (HBN 37). DHSS, HMSO, 1981. ISBN 0113207433.

Health Technical Memoranda (HTMs)
Various HTM contain standards.
Sterilization (HTM 2010). NHS Estates, HMSO, 1994.
The control of legionellae in healthcare premises – a code of practice (HTM 2040):
Good practice guide, NHS Estates, HMSO, 1993. ISBN 0113216831;
Management policy, NHS Estates, HMSO, 1993. ISBN 0113216807;
Design considerations, NHS Estates, HMSO, 1993. ISBN 0113216893;
Operational management, NHS Estates, HMSO, 1993. ISBN 0113216823;
Validation and verification, NHS Estates, HMSO, 1993. ISBN 0113216815.

Chartered Institution of Building Services Engineers (CIBSE)
CIBSE Lighting Guide LG02. Hospitals and health care buildings, Chartered Institution of Building Services Engineers (CIBSE), 1989. ISBN 0900953373.
CIBSE Lighting Guide LG03. Areas for visual display terminals, Chartered Institution of Building Services Engineers (CIBSE), 1989. ISBN 0900953411.

Video cassette
A matter of conscience (video cassette). DHSS, Health Building Directorate, available through NHS Estates.

10.56 Further support and reference material is listed with the appropriate parts which follow.

Contents

11.1 Introduction *page 15*

11.4 General matters relating to electricity *page 15*
- 11.9 Saving potential
- 11.10 Peak lopping
- 11.12 Combined heat and power (CHP)
- 11.14 Reduction of installed load
- 11.15 Improved control
- 11.16 Change of energy source
- 11.17 Summary

11.18 Metering *page 17*
- 11.18 Introduction
- 11.25 Meters
- 11.27 Primary meters
- 11.33 Secondary meters
  - 11.34 Heat metering
  - 11.36 Water metering
  - 11.37 Steam metering
- 11.46 Sub-metering
- 11.48 Metering of individual services
  - 11.49 Space heating
  - 11.53 Domestic hot water heating
  - 11.56 Electrical services
  - 11.58 Gas services
- 11.59 Metering philosophy
  - 11.59 Extent of metering
  - 11.64 Functional zones
  - 11.65 Natural zones
  - 11.68 Site zone model
  - 11.70 Financial viability

11.75 Boiler plant *page 21*
- 11.75 Introduction
- 11.79 Heating medium
- 11.86 Standby capacity
- 11.90 Site topography and load intensity
- 11.95 Fuel options
  - 11.96 Gas
  - 11.98 Oil
  - 11.100 Coal
  - 11.101 Electricity
  - 11.102 Waste heat
  - 11.103 Multi-fuel
- 11.108 Boiler options
  - 11.109 Modular
  - 11.110 Cast-iron sectional
  - 11.111 Small steel welded
  - 11.112 Packaged shell boilers
  - 11.113 Water-tube boilers
  - 11.114 Electric boilers
  - 11.115 Firing
- 11.120 Load profiles
- 11.124 Operational policy
- 11.129 Sterilizers
- 11.133 Boiler selection
- 11.140 Technical option appraisal
- 11.145 Financial option appraisal
- 11.152 Supplementary information
  - 11.152 Testing and commissioning
  - 11.156 Boiler instrumentation and logs
  - 11.161 Boiler controls and BMS

11.165 Space heating *page 31*
- 11.165 Introduction
- 11.168 Inadequacy of existing heating systems
- 11.170 Temporary buildings
- 11.172 Convenience of supply
- 11.173 Substations and switchrooms

11.174 Mechanical services emitters and controls *page 32*
- 11.174 Heat emitters
- 11.175 Off-peak emitters
- 11.178 Radiant energy
- 11.179 Radiant-panel heating
- 11.180 Fan convectors

11.182 Pipe insulation *page 33*

Support and reference material *page 33*

11.0 Building services

Introduction

11.1 All services, and some special aspects, are dealt with in this section.

11.2 It is important to distinguish between using the right fuel in order to save money at the procurement stage, and the conservation of energy in actual use. Usually, the savings from the two are complementary but this is not always the case. For example, it is essential to take account of the associated labour costs, which may vary between different makes of equipment and different fuels, and of any supplementary fuel that may be required. Modern appliances which use gas, oil or coal will have varying degrees of ancillary or sacrificial appliances which can use considerable amounts of electricity.

11.3 Most plant, which is used for heating buildings or water or producing large amounts of process steam, will use a range of fossil fuels. These plants and their fuel will be selected taking account of strategic needs and the likely future costs of the various fuels. Electricity is a convenient, widely available and, as a consequence, widely used form of energy. This makes it a difficult medium to control and this section commences with a general overview of its use and control.

General matters relating to electricity

11.4 Hospital electricity consumption has increased substantially. The rate of increase since 1978/79 has been between 3% and 4% per annum, with more recent trends accelerating to as much as 8%. The cost of providing electricity to hospital sites is as much and in some cases, more than, the provision of fossil fuel.

11.5 Figure 34 illustrates the trends in consumption since 1978/79 for both electricity and fossil fuels. It can be seen that during this period there was a significant increase in electricity use. There was also a corresponding reduction in the use of the much cheaper and less environmentally damaging (because of their better primary conversion ratio) fossil fuels. This reduction in fossil-fuel consumption

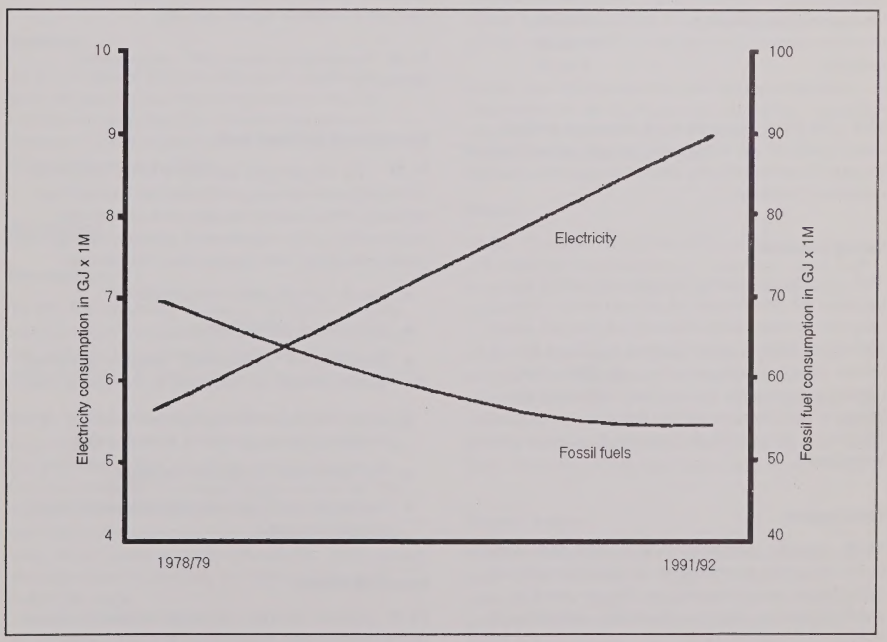

Figure 34 Electricity and fossil fuel consumption trends in NHS hospitals (England) 1978/79 to 1991/92

is now probably below the point of diminishing returns, especially if electricity is being used for heating or other operations which can be directly fuelled by gas or oil.

11.6 A close examination of the energy functions within the hospital, especially in processing areas like catering and waste disposal, should be undertaken to control these trends and these subjects are covered later in the text. This is not to say that there have been no measures introduced in order to save electrical energy, particularly in lighting and some other areas of energy management. Without such measures the increase in electrical consumption would have been even more dramatic.

11.7 Electricity is used to provide an increasingly wide range of services within hospitals, including many items of electro-medical equipment, lighting, catering, heating and computer systems. The proportion of the electricity consumption associated with each type of load varies from site to site. Typical consumptions would be within the following ranges:

Type of load	Percentage of overall consumption
Lighting	16 to 57
Catering	2 to 30
Small power	10 to 28
Ventilation/air-conditioning	up to 40
Computer systems	up to 10
Laundries	4 to 10

11.8 This list of categories is not exhaustive and the ranges given are only indicative of typically expected values for multi-departmental sites rather than specialist or single-department buildings.

Saving potential

11.9 In order to help contain carbon dioxide (CO_2) emissions the Government has set a target of a 15% reduction in energy consumption in the five-year period 1991/92 to 1995/96 and in Scotland a 1.5% to 2% volume reduction each year to the year 2000. Energy conservation measures can contribute towards these savings in both new and existing hospitals, as can greater efficiency in the use of fuel. These are discussed in general terms below.

Peak lopping

11.10 Standby generators can be used for peak lopping during the winter months when the maximum demand (MD) charges are particularly high. This can result in significant savings. However, the viability depends on a number of factors including:

- the suitability of the plant for extended running times;
- the rating of the generator;
- the ability to synchronise with the mains supply;
- the frequency of engine starts;
- the electricity supply tariff arrangement.

11.11 A major advantage of using standby generators (SBGs) for peak lopping is that the generator can be run under load regularly and hence reliability can be tested. It is important to note, however, that many SBG sets are not designed for indefinite periods of use, and care should be taken not to exceed acceptable running times. Further guidance on SBGs is given in Health Technical Memorandum (HTM) 2011 – 'Emergency electrical services'.

Combined heat and power (CHP)

11.12 CHP can be used to reduce the cost of electricity by utilising a lower-cost primary fuel (oil or natural gas) to generate electricity and recovering the waste heat from the engine. There are a number of options available for CHP, including the use of existing SBGs and dedicated engine/generator/heat-recovery sets. It should be noted that heat exchangers fitted to reciprocating diesel generators are prone to sooting and require careful selection to facilitate regular cleaning.

11.13 Further guidance on CHP is referenced in Section 16.

Reduction of installed load

11.14 This will generally involve the direct replacement of existing electrical equipment with that having a high efficiency. Where existing equipment is considerably oversized for current requirements, potential savings may justify replacement with smaller plant. For example:

- use of high-efficiency luminaires/lamps;
- reduction of lighting levels;
- elimination of "unauthorised" electrical appliances (kettles, heaters etc belonging to members of staff);
- imposition of restrictions on the casual use of certain equipment during periods of peak demand;
- half-speed fans for standby operation;
- load shedding of non-essential loads during periods of peak demand.

Improved control

11.15 This will generally involve the installation of new or improved controls for existing electrical equipment. Substantial savings can be made by ensuring that

equipment or plant is used only when there is a requirement, rather than having it in continuous operation. Control can be effected by the use of automatic controls or by increased staff awareness. For example:

- automatic light switching using sensors/time clocks;
- time control of ventilation/air-conditioning plant;
- improved electrical space/water heating controls;
- phasing of non-essential loads to reduce the overall MD.

Change of energy source

11.16 Where there are alternatives to utilising electricity as the energy source, these should be investigated. Gas-fired alternatives are available for most types of electrically heated equipment. Although the overall energy consumption may increase considerably, revenue savings may be achieved because of the lower unit price of natural gas. For example:

- replacing electrical cooking appliances with gas-fired equivalents;
- upgrading inadequate heating systems to eliminate supplementary heating;
- eliminating direct electric heating systems wherever possible.

Summary

11.17 In general there has been more emphasis in recent years on reducing fossil fuel as opposed to reducing electricity consumption. It is essential that greater emphasis is given to identifying potential electrical energy-saving schemes in the future.

Metering

Introduction

11.18 The monitoring of energy, first through regular audits, in order to establish the overall pattern of energy use, and then through regular metering, is vital to the establishment of an effective energy management regime.

11.19 On many hospital sites, the only form of energy/utility metering consists of the main incoming electricity, gas and water meters, which are owned and read, for billing purposes, by the relevant supply authorities. The resulting consumption records, along with delivered quantities and approximate stock levels for oils or solid fuels, do not usually coincide with calendar month periods and at best can be used only for crude monitoring of overall site usage.

11.20 To monitor and control energy effectively, the use of additional meters is required. These are to provide information on the efficiency of any major energy conversion processes, the individual departments and the distribution of energy usage across the site.

11.21 Generally, meter costs increase dramatically with instrument quality and accuracy. There is also a reading and recording cost implication. However, as building management systems (BMS) become more widespread, automatic meter reading, the generation of consumption profiles, monthly consumption reports and consumption-anomalies alarms are all technically possible. Also, cheaper non-certificated meters, with a lower level of accuracy than the billing meters, can be employed for such purposes.

11.22 As the larger and more obvious energy conservation schemes are implemented and target levels approached, it becomes progressively more difficult to identify inefficiencies and to control energy usage. Experience has shown that by providing user managers with regular energy consumption reports, substantial savings can be identified and realised in a short period. The resultant lower consumption levels are generally maintained thereafter.

11.23 The installation of reliable metering will inevitably increase both the amount and quality of feedback data related to the overall performance of various departments. This will in turn improve the accuracy of analysis for plant option appraisals and lead to future schemes that have a greater "designed-in" energy efficiency.

11.24 It is not the intention here to present detailed information on specific meters but to propose a metering philosophy which covers both the extent and type of metering for existing hospital sites.

Meters

11.25 The basic energy and utility services imported onto a hospital site include electricity, natural gas, water (with its related sewerage charges), coal and various grades of oil.

11.26 To provide information on energy conversion efficiency and distribution it is necessary to meter secondary quantities such as steam, condensate and heat. Information on the application and performance of various types of meter is contained in the Engineering Data Sheet DR6 – 'Metering, energy and water consumption' 1980.

Primary meters

11.27 Meters for measuring natural gas, electricity and water consumption by the supply authorities are in widespread use. The production levels of these meters are high and sufficiently accurate instruments are readily available at reasonable cost. Counter sensors can usually be attached to standard meters to provide an output signal

that is compatible with a BMS input. Alternatively, some meter manufacturers offer units that incorporate an analogue or digital output that is suitable for a remote reader or a BMS interface.

11.28 Bulk oil deliveries are usually measured using dipstick or level-gauge readings, or even meters, on the delivery tankers and there is no requirement for an installed totalising meter for billing purposes. No single type of meter has been developed as the accepted standard oil meter.

11.29 Several types of inferential or positive-displacement meters are available. These basically measure the volume of liquid passed. For hospital services, oil consumption is usually restricted to boiler plant and diesel generators, where simple positive-displacement meters, which record total flow to within 2%, are the most commonly used.

11.30 Coal is also delivered in bulk as discrete loads of known weight and there is no requirement for on-site metering for billing purposes. Traditionally, coal consumption metering has been based on the volume entering individual plant hoppers or stokers using feed-screw revolutions, ram travel or chain-gate travel multiplied by bed depth etc. The energy content of the coal is then calculated using average values of density, calorific value and moisture content, all of which vary. The accuracy of coal metering by these methods is questionable, even when regular calibrations and corrections for variations in coal properties are implemented.

11.31 A better method of metering coal consumption is to install load cells on storage hoppers or transfer conveyors to determine the mass of coal being handled. Many new coal installations incorporate storage silos which can be mounted on load cells to give a reliable reading of the mass.

11.32 Basic coal properties remain relatively constant when it is stored in enclosed silos and the total energy content of the coal throughput can be determined with reasonable accuracy using the mass consumed.

Secondary meters

11.33 Most of the fossil-fuel consumption and part of the electricity consumption in hospitals is used in conversion plant to produce a secondary medium, usually steam or hot water, which is distributed around the site. Metering of these secondary media can provide information on both the net energy supplied to the end user and the overall efficiency of the conversion plant.

Heat metering

11.34 Where low-, medium- or high-pressure hot water is the heating medium, heat meters can be used to determine the total energy supplied to any system. Heat meters consist of a suitable water meter, two temperature probes and a totaliser unit. The water meter measures the quantity of water supplied and the temperature probes measure the difference between the flow and return water temperatures. The totaliser uses these measurements to give the rate of heat supplied and accumulates the instantaneous readings to give the total heat supplied.

11.35 Heat meters are reasonably reliable and moderately priced. Most manufacturers offer heat meters with pulsed outputs to interface with a BMS.

Water metering

11.36 Water meters can be inserted between the feed pump and boiler shell of steam boilers. They give a fairly accurate measurement of water consumption and determine the boiler efficiency by direct measurement. It is also a very useful check to ensure that carry-over is not taking place. A high water consumption gives an abnormally high apparent thermal efficiency. This is an indication that water is being passed through the boiler without being evaporated. Domestic hot and cold water should also be metered.

Steam metering

11.37 Steam metering is considerably more complex and expensive than heat metering. The heat content of each kilogram of steam varies with its temperature and free-moisture content. Virtually all steam meters are based on volume flow rate and have to be corrected for temperature and pressure to obtain the true density and the overall energy content.

11.38 The metering principles used in the main types of steam meter include the pressure drop across a fixed or variable orifice; the rotation of a turbine in a bypass "shunt" line; the deflection of a spring-loaded plate; and the frequency of vortex shedding from a bluff body. The accuracy, range and cost all vary with meter type and the final selection will depend on the requirements and benefits associated with each individual application.

11.39 If the steam conditions are constant, a basic steam flow meter can be used to determine the overall energy content. Many hospital steam meters have been installed on this basis. Unfortunately, the steam conditions are rarely constant and meters are often oversized and poorly maintained. Hence, steam meters, and orifice plates in particular, are notorious for their inaccuracy.

11.40 A correctly sized steam-meter installation with effective steam trapping and separation can provide

accurate information on steam flow. To obtain the overall energy content, the flow reading has to be corrected for temperature and pressure variations. Most meter manufacturers offer this facility using dedicated meter circuitry via a BMS interface.

11.41 Steam gives up its heat by condensation and the heat content in the condensate returned to the boilerhouse can be as much as 25% of the total heat content of the steam supplied. The actual value depends on the initial steam quality, the heat load and the characteristics of the heating plant being served. Therefore, even where accurate steam consumption data is available, allowance has to be made for the heat content/kg of the condensate returned in determining the true energy supplied to the end user. The heat content of the condensate is usually estimated.

11.42 Conversely, where a plant has a 100% condensate return, the energy supplied can be determined by measuring the condensate returned and estimating the heat content/kg of steam supplied. Condensate is basically hot water and in many applications condensate metering can be less expensive and less complicated to install than steam metering. It can, therefore, provide a convenient method of apportioning energy consumption to a number of systems/departments.

11.43 Where condensate is pumped back to the boilerhouse via a vented receiver vessel and a steam Ogden or electric pump, there are two possible methods to measure the condensate returned. A suitable water meter capable of withstanding the condensate temperature can be installed in the pump discharge line, provided that the meter pressure drop does not exceed the available flash-steam margin.

11.44 Another, less accurate, method is to determine the condensate discharged during each pumping operation and to install a simple pump-cycle counter.

11.45 On calorifier plants that incorporate a condensate sub-cooler it is feasible to install a water meter into the sub-cooler discharge, provided that the meter can withstand the condensate temperature and any pulsations generated by the steam traps.

Sub-metering

11.46 Sub-metering of both primary and secondary energy/utility media can be implemented using the various meters described above, provided that the additional loads or restrictions imposed by the proposed sub-meters can be tolerated by the relevant systems.

11.47 There are a number of benefits associated with the installation of adequate sub-meters. These include:

- sub-metering of consumption, providing specific information on the energy/utility implications of individual departments or buildings and enabling changes to be reported back to the end user, thus encouraging local responsibility for energy consumption;
- comparison of the total sub-meter readings with the main meter, to cross-check or validate the billed usage and possibly identify leaks or unsatisfactory plant performance;
- information on the gross imported energy/utility on to a site, the boilerhouse outputs and the net building usage, enabling both the overall conversion efficiency and the distribution efficiency to be evaluated;
- the establishment of performance indicators for departments or buildings, which can then be compared with other, similar buildings.

Metering of individual services

11.48 Where metering services involve a conversion process, such as a boiler, it is desirable to report information on the net usage and the total costs to the user. This is particularly useful as the users are provided with energy consumption data for areas only under their direct control, but management obtains additional information on the overall conversion/utilisation efficiency. Unfortunately, this is not always practicable and some form of indirect measurement is necessary.

Space heating

11.49 The majority of space-heating systems in hospitals are served by low-pressure hot water (LPHW). A heat meter can be used to measure the LPHW energy consumption. Heat meters provide a direct means of measuring the heat input into a particular building/department and should be used wherever possible as the preferred means of metering.

11.50 It is acceptable to meter only the fuel consumed by the boiler when the space-heating LPHW is supplied by a dedicated boiler plant. In this case regular boiler efficiency checks should be undertaken.

11.51 Steam meters can be used when space-heating LPHW is supplied by a steam-to-water calorifier or the heating system itself is steam-heated. However, the expense of a suitable steam meter having a wide turndown range may not be justified in individual plantrooms. If a plant arrangement is compatible with the installation of a suitable condensate meter, this is an acceptable alternative to steam metering.

11.52 Invariably, space-heating and domestic-hot-water-service (DHWS) calorifiers are located in the same

plantroom, and condensate is collected from both plants before being pumped back to the boilerhouse. Consequently, the space-heating demand cannot always be separated from the DHWS demand, although the combined heat load could be measured and reported.

Domestic hot water heating

11.53 DHWS in hospitals generally consist of LPHW- or steam-heated storage calorifiers or direct-fired heaters. The domestic hot water is continuously circulated in order to maintain the temperature within the distribution pipework and it is not practical to use heat meters on the secondary circuit.

11.54 Where the DHWS is heated using LPHW, a heat meter can be installed to meter the LPHW heat input. Where steam is used, condensate metering is preferred, as the load is generally small with wide variations and the expense of steam metering cannot be justified.

11.55 It is acceptable to meter the fuel input into the system, provided that regular efficiency checks are undertaken, where the DHWS is served by a dedicated boiler or is directly heated.

Electrical services

11.56 Electricity consumption metering can be achieved relatively easily using meters incorporating voltage and current transformers. Individual loads, departments or buildings can be metered, provided that a suitable distribution point and meter location is available. The load must be of sufficient size or importance to warrant the cost of the meter installation.

11.57 Where there is a need to monitor elemental electrical loads to determine MD or power-factor profiles, temporary or portable metering equipment is likely to offer the most cost-effective means of measurement.

Gas services

11.58 It may be necessary to meter the gas consumptions of individual buildings/departments or items of plant. Measurement is generally straightforward and requires only an appropriately sized meter to be installed in the supply pipe serving the load, provided that the meter pressure drop can be tolerated by the system.

Metering philosophy

Extent of metering

11.59 In the ideal situation, sufficient metering would be installed to provide consumption/cost data for each energy/utility service to individual functional departments/ budget holders and any energy-intensive areas.

11.60 On established sites, where services distribution systems already exist, various departments share the same buildings or sub-systems and the areas served by each distribution zone are often different for each energy/utility system. The ideal situation cannot be achieved at a reasonable cost and a compromise solution is required.

11.61 One method is to agree an apportionment of costs based on calculation or short-duration sample measurements using portable equipment. This may be acceptable for a number of departments sharing a common system, but offers no continuous monitoring facility for larger sites with multiple systems.

11.62 Some sites readily lend themselves to permanent sub-metering, whereas on other sites the combined modification work necessary, plus the meter installation costs, cannot be justified when compared with the potential savings. To establish the suitability of a site for sub-metering, information on the desired functional zones and natural service distribution zones is required to construct a feasible site zone model.

11.63 If the site zone model is acceptable in principle, a financial analysis should be undertaken to establish the overall viability.

Functional zones

11.64 The first stage of a sub-metering exercise is to identify clearly on a site plan the various areas of functional responsibility or departments with accountable budget holders/managers. A typical breakdown could include:

- operating departments;
- wards;
- medical support (pathology, physiotherapy etc);
- outpatient and accident and emergency (A and E) departments;
- day surgery;
- laundry;
- central sterile services departments (CSSD);
- residential accommodation.

Natural zones

11.65 Most sites can be sub-divided into a number of natural building groups or zones. Usually, each of these zones is served by its own plantroom, which provides either space heating or domestic hot water or both. These natural zones often coincide with a basic separation between medical, non-medical and residential functions.

11.66 Whenever sub-metering is desirable within a natural zone, considerable investigation may be required to establish:

a. that the distribution systems are suitable for the installation of meters to monitor each sub-zone;

b. that the total energy/utility costs for each sub-zone are sufficiently large to justify the costs of installing suitable meters.

11.67 The next stage is to produce a schematic diagram of the distribution network for each energy/utility and identify suitable locations for sub-meters. The resulting natural zones or sub-systems can be grouped and transferred to a copy of the site plan.

Site zone model

11.68 The site zone model basically consists of a site plan onto which all of the functional zones and service zones are marked. This shows the compatibility between the various zone types and the extent to which metering of the ideal functional zones can be achieved. Invariably, some of the meter zones intersect and the metered value may have to be apportioned between them.

11.69 A table can be constructed from the site zone model as to which sub-meter consumption reports correspond to which functional zone or manager.

Financial viability

11.70 If the site zone model is acceptable, the required extent of metering will be known and a scheme cost can be established.

11.71 The data available on the level of savings that have been achieved directly as a result of additional metering are limited. However, case studies have been reported in the industrial sector, where substantial savings have been achieved by utilising meters and making regular target levels of consumption. There is no reason why similar savings should not be made in the NHS.

11.72 A realistic initial saving achievable from a metering policy on hospital sites may be as low as 2% of the energy/utility cost. Therefore, using a five-year payback criterion, the cost of installing sub-metering should not exceed 10% of the total annual energy/utility cost for the individual zone or site, as applicable.

11.73 Whenever the proposed meters require manual reading and reporting procedures, the associated revenue costs should be included in the financial assessment along with the meter maintenance and repair costs.

11.74 Similarly, if an energy management system or BMS with automatic recording and reporting facilities is available, the initial programming should be included in the scheme cost.

Boiler plant

Introduction

11.75 Any boiler plant installation should satisfy the following fundamental requirements:

a. the strategic requirements of the site;

b. safety in its structural design, controls, access etc;

c. capability of meeting the demand with a high overall efficiency;

d. burning fuel efficiently with minimum boiler fouling and exit-flue gas loss;

e. economy in capital and revenue (fuel, labour, maintenance etc) costs;

f. capability of easy cleaning and repair;

g. sufficient heating surface for optimum heat transmission;

h. sufficient fluid circulation to prevent overheating.

11.76 There are many differing plant arrangements for a particular boiler application, each dependent on the decisions made regarding the heating medium:

a. central or local boilerhouses;

b. the fuel used;

c. the method of firing;

d. the types of boiler construction;

e. the number and size of boiler units and the anticipated operating procedures.

11.77 Consequently for both green-field and existing sites there are numerous plant options. Past experience, and recent option appraisal studies, indicate that the most suitable boiler plant arrangement for any particular application is generally that having both a low revenue cost and a high overall boiler efficiency.

11.78 There is no effective, rigid selection procedure for boiler plant and certain decisions within the client brief are the prerogative of the design engineer. There follows basic information on the options available, an indication of some of the important factors in the selection process and guidance on the elimination of unsuitable options.

Heating medium

11.79 The media most commonly used to distribute heat energy, from the boiler plant to the local heating plant and equipment, are LPHW, medium- or high-pressure hot water (MPHW, HPHW) and steam.

11.80 LPHW systems operate at near-to-atmospheric pressures and, if boiling is to be avoided, the water temperature must be kept below 100°C. Typical flow and return temperatures are 82°C and 71°C respectively. Therefore, LPHW boilers are suitable for applications where the boiler plant is near to the individual heating systems being served and there are no process requirements for higher temperatures or for steam.

11.81 MPHW and HPHW operate at substantially higher than atmospheric pressure and temperatures well above 100°C. Pressurisation is usually achieved using nitrogen gas or air in pressurisation vessels; operating temperatures up to 160°C are typical. Consequently MPHW or HPHW applications tend to include central boilerhouses with extensive distribution systems or to serve systems with a high-temperature requirement, for example, radiant-panel heating.

11.82 Steam is a common heating medium for large centralised boiler plant. The steam's own pressure is used as the driving force for the pipework distribution and overall pumping power is related only to the mass of the steam consumed.

11.83 All steam systems lose a proportion of the system fluid as flash steam in vented vessels or tanks. Boiler-water blowdown is necessary to maintain boiler water quality; hence there is an associated heat loss and an additional requirement to treat make-up water chemically. The heat loss factors can be taken into account when making boiler load assessments by incorporating a steam utilisation efficiency of around 95%.

11.84 Heat recovery from boiler blowdown is covered in the Energy Efficiency Office Fuel Efficiency Booklet, Number 18.

11.85 Certain items of hospital equipment, for example and in particular, high-temperature steam sterilizers, require high-quality process steam, often with high flow rates for short periods. Small, local steam-raising boilers are usually expensive and under-utilised. When all the above factors are considered, central steam generation using low-cost fuel traditionally has been an attractive solution for most large-spread sites with essential steam loads. Developments in the standards for steam for sterilizing medical devices may require a return to specialised local steam-raising plant.

Standby capacity

11.86 In the event of single operational boiler breakdown, the loss in output for a protracted period may not be tolerable, depending on the size and nature of the hospital demand. There are three methods of operating standby plant with decreasing response times and increasing energy efficiency:

a. "on-line standby", where the number of boilers actually on line exceeds the hospital load requirements and the loss of one boiler is not evident beyond the boilerhouse. This is inefficient as a substantial fuel cost is involved;

b. "hot standby", where a boiler is kept off line but warm so that it can be fired to supplement any loss in total boiler capacity within minutes. This is a compromise, the fuel cost being about 25% of that for "on-line standby";

c. "cold standby", where a spare boiler has to be fired from cold when an on-line boiler fails. This could take two hours or more for a large boiler before the loss of boiler capacity is restored. This is efficient as there is no continuous fuel cost for standby.

11.87 The response time of most conventional heating systems, in traditional or well-insulated hospital buildings, can be several hours and the temporary loss of a boiler can be accommodated. Sufficient numbers and sizes of boilers should be installed to cater for the maximum hourly load which exists only for less than 10% of the year. With most central boiler installations sufficient standby plant should be available for most of the year.

11.88 Load shedding of heating systems for non-essential areas can be adopted in the event of a boiler failure during periods of maximum demand, provided that the malfunctioning boiler can be returned to normal operation in a relatively short time and that suitable valves and space provision are available to install a temporary emergency boiler.

11.89 The standby policy for any particular site should also take into account the maintenance downtime requirements, the method of operation and whether there is a real need to provide additional plant, beyond that necessary for the maximum load, solely for standby purposes. The policy can have a considerable influence on the final plant selection, particularly with regard to the number and size of boilers; it should be discussed and agreed at an early stage.

Site topography and load intensity

11.90 Both the lie of the land and the concentration of the building heat-load centres can influence the location of the boilerhouse and the viability of central or decentralised boiler arrangements.

11.91 On sloping sites, the boilerhouse location will have direct influence on the chimney height requirement. Gravity can be used to advantage for the delivery and subsequent handling of fuel in coal-fired installations.

11.92 With central boiler plant, the heat output has to be transported across the site, incurring inevitable distribution heat losses. The advantages are that a

multiple-unit central plant provides better load matching, requires lower standby capacity and is generally more sophisticated, with a greater modulation range. Resultant high overall boiler efficiency, combined with the ability to burn low-grade, less expensive fuels gives low overall energy costs, provided that the distribution losses and any additional losses associated with the type of heating media, are not excessive.

11.93 Decentralised plants, being smaller, tend to be less complicated with lower maintenance costs. While there are fewer site distribution losses associated with decentralised plants, they usually burn premium fuels and have a lower overall boiler efficiency, both of which lead to higher energy costs.

11.94 It is generally cost-effective to provide central boiler plant on most large sites and decentralised plant on sites with a number of separate LPHW loads or for small isolated buildings remote from a central boilerhouse. As these two concepts often overlap, both centralised and decentralised plant options should be assessed in detail before a final decision is made.

Fuel options

11.95 A commentary on fuel purchasing arrangements is given in Section 25. As well as the overall energy costs, the choice of fuel will affect the boilerhouse requirements in terms of:

a. space for plant;

b. access for fuel delivery;

c. ancillary equipment;

d. extent of maintenance/attendance;

e. operational procedures.

Gas

11.96 Gas is a relatively expensive fuel, which does not require or have on-site storage. For large installations, an alternative standby facility, in terms of firing capability and storage, is needed for emergency use if the supply is interrupted by mains failure or terrorist activity etc. In some cases, provided the expected gas consumption is high, this can be turned into an advantage by negotiating a lower tariff for an interruptible supply and bearing the risk of possible interruption. However, many small LPHW boiler installations do not justify standby provision.

11.97 The advantages of gas-fired boilers include clean efficient combustion, fully automatic operation, a relatively quick start-up from cold, a compact plant arrangement and no acid corrosion problems. This makes gas-firing ideal for high-efficiency condensing boilers.

Oil

11.98 In terms of cost, oil is the least stable. The heavier-grade fuel oils tend to be cheaper than gas. Oil is stored on site and storage tanks as well as tanker access are required. The heavier fuel-oil grades have to be stored, transported and fired at elevated temperatures and suitable pumping and heating equipment is required.

11.99 The advantages of oil-fired boilers include efficient combustion with a wide operating range, fully automatic operation, a relatively quick start-up from cold and a compact plant arrangement.

Coal

11.100 Coal is usually the lowest fuel cost option. Coal-fired boilers tend to be significantly larger and hence more expensive than oil or gas boilers of an equivalent output. The combustion efficiency can be as high as or even higher than alternative fuel boilers, but coal boilers require more space, more frequent cleaning/maintenance and are generally less tolerant of abuse or neglect. Consequently, in practice, many coal-fired installations have low overall efficiencies. Other requirements include access for delivery vehicles, as well as the provision of storage and handling plant for both the coal and ash.

Electricity

11.101 Electricity can be used for direct DHWS heating or for the generation of LPHW or steam in electrical boilers. Electricity is a premium energy source costing three to five times the equivalent cost of fossil fuels. The electricity demand and consumption in hospitals is continuously rising and electricity should be used only for heating purposes in demonstrably justifiable circumstances.

Waste heat

11.102 Waste heat boilers are specifically designed to extract heat from the waste exhaust gas of a process plant, rather than to burn a fossil fuel directly. The current trend in hospital incinerators is towards fewer, larger installations with increasing exhaust-gas temperatures. Where there is a shortfall or mis-match between the hospital boiler load profile and the waste gas available (although this can be supplemented by incinerating waste fuel pellets), waste heat boilers represent a valuable contribution to the overall boiler output rather than another fuel source.

Multi-fuel

11.103 The transition from gas- through oil- to coal-fired plant generally reflects an increasing space requirement and capital cost with a decreasing revenue cost. With unstable fuel costs, the optimum boiler fuel can change a number of times within the life of the boiler plant and

"multi-fuel" or "mixed-fuel" plants are becoming more common.

11.104 There are many dual-fired installations in the NHS, owing to the standby fuel requirement associated with gas-fired plant. Consequently, dual-fuel boilers have been available for some time. The triple-fuel boiler is a further variant.

11.105 The triple-fuel boiler is basically a coal-fired design that is capable of withstanding the high furnace exit-gas temperatures that occur in natural-gas boilers. This enables the boiler shell to be fitted with coal-, oil- or natural gas-firing equipment. The resulting boiler thermal efficiency tends to be reasonably high, regardless of the fuel type. As the fuel may change a number of times within the boiler life, the expected performance on each fuel should be established before a final decision is made.

11.106 The ideal multi-fuel boilerhouse has the special facilities for coal plant, boilers which are "readily" convertible to any fuel, silos suitable for coal or oil storage and a nearby gas supply of adequate size.

11.107 The mixed-fuel boilerhouse represents a slightly less flexible compromise, using proven existing technology with single-fuel boilers. An example mixed-fuel boilerhouse could include coal boilers to cater for the hospital maximum load with a "cold" oil-fired standby emergency boiler. Most main-load boilers can incorporate a waste heat gas path for incinerator heat recovery.

Boiler options

11.108 A wide variety of boiler constructions are found in hospital applications.

Modular

11.109 These are larger than domestic boilers and are used individually or in groups with step control. They have either cast iron or highly-rated finned-tube heat exchangers and include the condensing range of gas boilers (usually LPHW only).

Cast-iron sectional

11.110 These boilers are larger than the modular units and have cast-iron heat exchangers which are manufactured in sections and held together with tie rods (LPHW or steam).

Small welded steel

11.111 These cover a similar range to the cast-iron sectional boilers, but have combustion chambers and tubular gas passages which are fabricated in steel (LPHW or steam).

Packaged shell boilers

11.112 Also known as "economic boilers", these are used on most large hospital sites. They consist of a cylindrical outer shell made from steel plate, which houses the main combustion/furnace tube and a series of smaller convection tubes arranged in one, two or sometimes three, parallel paths or passes. The chamber where the hot gases transfer from the furnace tube to the first convection pass can have a refractory-lined "dry-back" or water-cooled "wet-back" outer wall (any medium).

Water-tube boilers

11.113 The heating fluid flows inside steel tubes with the hot gases on the outside. Where used for NHS applications these are usually the "once through" type, whereby the tube banks are connected in series to form what is effectively a long, single tube path. Small packaged units, known as coil boilers, have low storage capacity and hence a rapid start-up. Large water-tube boilers, rare in the NHS, are known as "La Mont boilers" (any medium).

Electric boilers

11.114 There are two main types of electric boiler. Electrical resistance boilers have heating elements similar to a domestic hot-water immersion heater. For higher pressures and outputs, an electrode boiler is used. Electrodes are placed into the boiler water and an electric current passed between them, through the water. This latter type of boiler, in particular, should only be used in exceptional circumstances.

Firing

11.115 There are a number of different types of firing equipment, that is burners and stokers, depending on the type of fuel.

11.116 Oil-burning equipment includes single-stage pressure-jet burners, two-stage pressure-jet burners, rotary cup burners, air-atomised burners, steam-atomised burners and pressure-jet burners with spill return.

11.117 Gas-firing equipment includes atmospheric venturi burners and pressurised burners of varying complexity, from simple small fixed-output units to large fully modulating burners.

11.118 Dual-fuel gas/oil burners are also available with a wide range of outputs.

11.119 Not all types of boiler are suitable for all fluids (heating media) or pressures and not all types of firing equipment are suitable for all types of boiler construction. Table 16 summarises the boiler/burner combinations with typical ranges of steady continuous operation, turndown

OUPUT PER BOILER (MW)	FLUID	BOILER TYPE	FIRING EQUIP + TURNDOWN RATIO (..1)						EFFICIENCY AT MAXIMUM CONTINUOUS RATING
			GAS	TD	OIL	TD	COAL	TD	
0.03–0.1	LPHW	Modular	Atmos.	1	Press Jet (35s) on/off	1			75–78%
0.04–1	LPHW LP Steam	CI Sectional (or welded steel)	Atmos. FD on/off	1 1	Press Jet (35s) (220s) on/off	1	Gravity Underfeed (FD) Mini Coker (low ram)	1 1 2	75% (80% with ID)
1–2	LPHW HPHW Steam < 20b	Steel shell Single fire tube Wet/dry back 2/3 pass	FD on/off	1	Press Jet on/off Press Jet high/low (35–950s)	1 2	Underfeed (B) Sprinkler	1 2	80–82%
2–5	LPHW HPHW Steam <20b < 30 S/H	Steel shell Single fire tube Wet/dry back 3 pass (4 pass)	FD mod.	2	Press Jet high/low Rotary Cup Air Atom (35–3500s)	2 5 5	Underfeed (B) Sprinkler (FD) Low Ram (ID) Chain Grate (B)	1 3 2 2½	82%
5–15	HPHW Steam <20b < 30 S/H	Steel shell Twin fire tube Wet/dry back 3 pass (4 pass)	FD Mod.	4	Rotary Cup Air Atom (35–3500s) (2 burners)	8 8	Underfeed Sprinkler Low Ram Chain Grate (2 stokers)	2 6 4 5	82%
.05–30	HPHW HP Steam +	Coil (small packaged up to 2MW)	As similar sized fire tube		As similar sized fire tube		Fluid Bed (with compartments)	2 4	80%
20–1000+	Steam HP+high S/H	Multidrum WT or La Mont (Economisers) (Air/heaters)	FD Modulating multi-nozzle (multi-burner) (Natural or Process gases)	2	Press Jet mod Spill Return Steam Atom (multi-burner) (3500 or Bunker C)	2½ 4 5	Sprinkler/dump Chain Grate PF (multi-burn) FB (comp)	3 3 4 4	86%
.01–.06	Water/steam	Elec. Resistance	Modulating TD = No. elements with on/off						98+%
.04–15	Steam	Electrode	Modulating TD = water level						98+%

Notes:

(a) Boiler efficiency is Full Load value excluding energy input to ancillary equipment
(b) Turndown Ratio is the ratio of the maximum to the minimum continuous firing rate
e.g. minimum firing rate = 20% of MCR then Turndown Ratio = 5 : 1
(c) 1 MW = 3 412 000 BtU/h = 3 500 lb/h steam F&A 212°F

Table 16 Boiler types, ranges and combustion equipment

ratios (that is maximum/minimum continuous firing rate) and thermal efficiencies.

Load profiles

11.120 Reliable information on the size and nature of the site load to be served by a new boiler installation is essential for the selection of a suitable combination of boilers.

11.121 Provided that information on the occupancy, boiler-related equipment and basic building size and construction is known, load data for new sites can be synthesised using the energy targeting assessment methods described in Encode 1.

11.122 Steam-meter readings and loads derived from fuel consumption levels and estimated boiler efficiencies are frequently inaccurate. Consequently, even on existing sites a load assessment provides a useful cross-check.

11.123 Ideally, data on the hourly boiler demand for typical 24-hour periods during each month of the season should be available. This can be generated using load modelling techniques, for example, as described in the Chartered Institution of Building Services Engineers (CIBSE)

Guides. As a minimum, the following load data is required to select a suitable boiler arrangement:

a. individual loads (including pattern of demand):
   (i) space-heating loads;
   (ii) air-heating loads for air-handling units (AHUs);
   (iii) DHWS-heating loads;
   (iv) process heating (kitchens, CSSD etc);
   (v) site distribution losses (for possible heating media);

b. total loads (taking load profiles into account):
   (i) peak winter maximum hourly demand (kW);
   (ii) peak winter minimum hourly demand (kW);
   (iii) peak summer maximum hourly demand (kW);
   (iv) peak summer minimum hourly demand (kW);
   (v) annual boiler load (gigajoules (GJ) a year).

Operational policy

11.124 Once a boiler installation has been handed over, the operational staff are expected to:

a. maintain sufficient on-line boiler capacity throughout day/night and summer/winter load variations;

b. keep a standby boiler available if required;

c. take plant off line as necessary to undertake routine maintenance and statutory inspections while retaining the above;

d. operate the installation in an energy-efficient manner.

11.125 Certain combinations of boilers are not compatible with the above requirements and can cause difficulties for operational staff. For example, a central coal-fired steam-boiler plant with two large winter boilers and one small summer boiler does not necessarily provide an efficient standby facility during the summer months, as one of the large boilers would have to be maintained in standby mode.

11.126 Some operational policies for steam plant incorporate reduced-pressure operation at night or when laundries are shut down. This can result in an increased boiler efficiency. However, the specific volume of steam increases with reducing pressure and steam velocities can increase dramatically. The reduced-pressure mode usually corresponds to periods of low load and the distribution system remains adequately sized. Individual boilers can be operating near to full load in this situation and priming or valve erosion can result.

11.127 Where steam boilers are to be operated at varying pressures, the design tolerances should allow for continuous operation at maximum pressure. Equally, valves etc should be adequately sized to accommodate the full range of operating pressures, including the lowest.

11.128 It is imperative that the intended operational policy associated with a particular boiler combination is written down and, for existing sites, agreed with the local operational staff at an early stage in the design process.

Sterilizers

11.129 During recent years, the heating arrangements on a number of sites have been converted from centralised steam-boiler plant with extensive site steam distribution network to central or decentralised LPHW-boiler plant. This has had considerable implications, particularly with regard to the use of sterilizers. Detailed guidance on the operation of sterilizers is given in HTM 2010 – 'Sterilization'.

11.130 Other than in exceptional cases where a local sterilization facility is necessary and can be provided by a transportable unit, it is recommended that sterilizers are located centrally and provided with steam of the quality given in HTM 2010.

11.131 Energy-saving procedures, such as shutting down steam plant during the night and preventing excessive heat loss in a hot well, will cause high levels of gas in the supply and low dryness values. This will result in a number of abortive cycles at the commencement of each day's work.

11.132 Electrode boilers are not considered suitable for sterilization purposes.

Boiler selection

11.133 Economic, shell-type steam boilers have a large reservoir of saturated water which releases steam as the pressure falls. Consequently these boilers have the capacity of accommodating short demands well in excess of maximum continuous rating (MCR), provided sufficient recovery time is available.

11.134 Boilers should be sized to satisfy the maximum hourly steam demand while operating at their MCR.

11.135 The maximum thermal efficiency for most modern boilers occurs at or near to the MCR. As the firing rate falls, more air is required per unit of fuel to ensure even air/fuel mixing and the lower overall gas velocities and temperatures reduce the heat transfer rate to the heating medium. Consequently, boiler efficiency tends to fall with a reducing firing rate.

11.136 Below the minimum continuous firing rate (turn-down ratio) most combustion equipment starts to cycle on and off. This involves pre- and post-air purges to carry combustible gases out of the boiler combustion chamber. These air purges force cool the boiler and the overall boiler

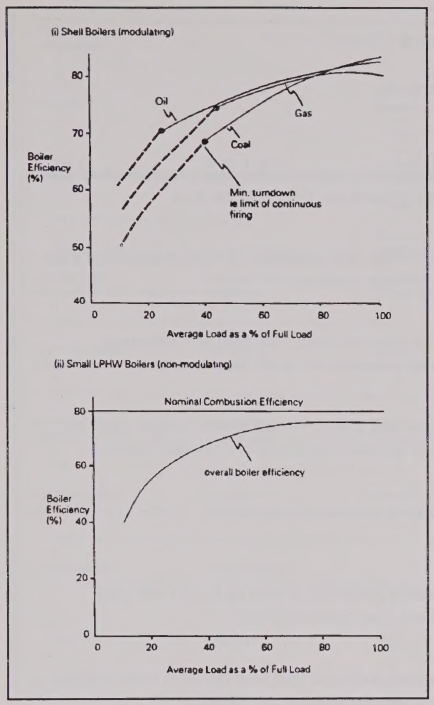

Figure 35 Typical boiler efficiency versus load characteristics

efficiency falls even lower. Typical load versus efficiency characteristics are shown in Figure 35.

11.137 Boilers should be sized to operate at as high a loading as possible and preferably within their turndown range.

11.138 By utilising a large number of smaller-sized boilers for a particular site application, the load matching, and hence energy efficiency, tends to increase as do the initial capital and maintenance costs. Often a compromise has to be reached which provides an installation with good load matching and standby facilities for most of the year, within cost limits.

11.139 Figure 36 gives examples of shell boiler arrangements, with comments on the suitability for different applications.

Technical option appraisal

11.140 Having obtained information on the site load profiles, other fuels, suitable heating media and the operational policy, a series of possible boiler combinations can be drawn up using manufacturers' standard boiler sizes.

11.141 Invariably, there are too many possible options to warrant a detailed costing for financial appraisal purposes. An initial technical appraisal can be undertaken to identify a shortlist of the most suitable options in terms of load matching and plant availability.

11.142 Many aspects of a technical appraisal cannot be compared directly in numerical terms and subjective assessments have to be made. For example, the relative importance of an improved energy efficiency compared to a loss of standby provision.

11.143 The flowchart in Figure 37 can be used to rank schemes in order of technical suitability. If too many options survive the ranking assessment with maximum points, these should all have high efficiency and good load-matching characteristics. In these circumstances, the several options with the lowest capital boiler costs for each fuel type should be selected for further analysis.

11.144 With each particular boiler selection there is an additional energy consumption associated with fuel delivery, storage and handling, as well as boiler ancillaries such as pumps, fans etc. The overall boilerhouse efficiency is somewhat lower than the boiler thermal efficiency. Rather than applying a lower estimated overall boilerhouse efficiency to account for these additional loads, they should be separately assessed for each boiler option and included in the financial option appraisal.

Financial option appraisal

11.145 Section 26 describes the various steps in financial appraisal procedures. For boiler plant options the project life is usually many years and the elemental make-up of both capital and revenue terms is relatively complex.

11.146 It is important that a financial appraisal is applied only to a shortlist of options that are technically acceptable from an operational viewpoint, as the financial appraisal does not apportion any weighting to features such as standby availability or fuel flexibility.

11.147 Benefit Cost Ratio (BCR) is often preferred for scheme comparisons when assessing a number of boiler plant options, possibly with different fuels, heating media and boiler combinations. All scheme options are compared to the "base" or "do nothing" option with the BCR defined as:

$$\text{BCR} = \frac{\text{Net Present Value (NPV) savings}}{\text{NPV capital costs}}$$

P = winter maximum load (sustained for a minimum of 1 hour)

	Installed capacity	Boiler arrangement (in multiples of P)	Comments
1.	2P	1 | 1	Small sites only, individual flue liners essential to obtain maximum turndown. Poor summer load.
2.	1½P	½ | ½ | ½	Medium/large sites preferred, oil fired arrangement sites up to 8:1 load turndown.
3.	2P	1 | ½ | ½	Medium sites preferred, coal fired with extended cleaning interval in winter 6:1 load turndown.
4.	2P	⅔ | ⅔ | ⅔	Medium/large sites preferred, if twin furnace coal fired 9:1 load turndown (industrial and hospital loads).
5.	2½P	1 | 1 | ½	Impractical summer standby facility.
6.	1⅓P	⅓ | ⅓ | ⅓ | ⅓	Large sites preferred, oil fired up to 12:1 site load turndown. Ideal load matching.
7.	2P	⅔ | ⅔ | ⅓ | ⅓	Large sites preferred, coal fired up to 9:1 load turndown (only ⅔ standby when winter cleaning).
8.	2P	1 | ⅓ | ⅓ | ⅓	Impractical winter standby facility.
9.	2⅓P	1 | ⅔ | ⅓ | ⅓	Ideal load matching but 3 sizes of boiler.
10.	2½P	1 | ½ | ½ | ½	More expensive than 7 above with less turndown but does give full standby facility.
11.	2⅚P	1 | ⅔ | ⅔ | ½	Impractical summer standby but 3 sizes of boiler.
12.	3P	1 | 1 | ½ | ½	High capital cost, low boiler loadings and high standby losses.

Figure 36 Example boiler arrangements

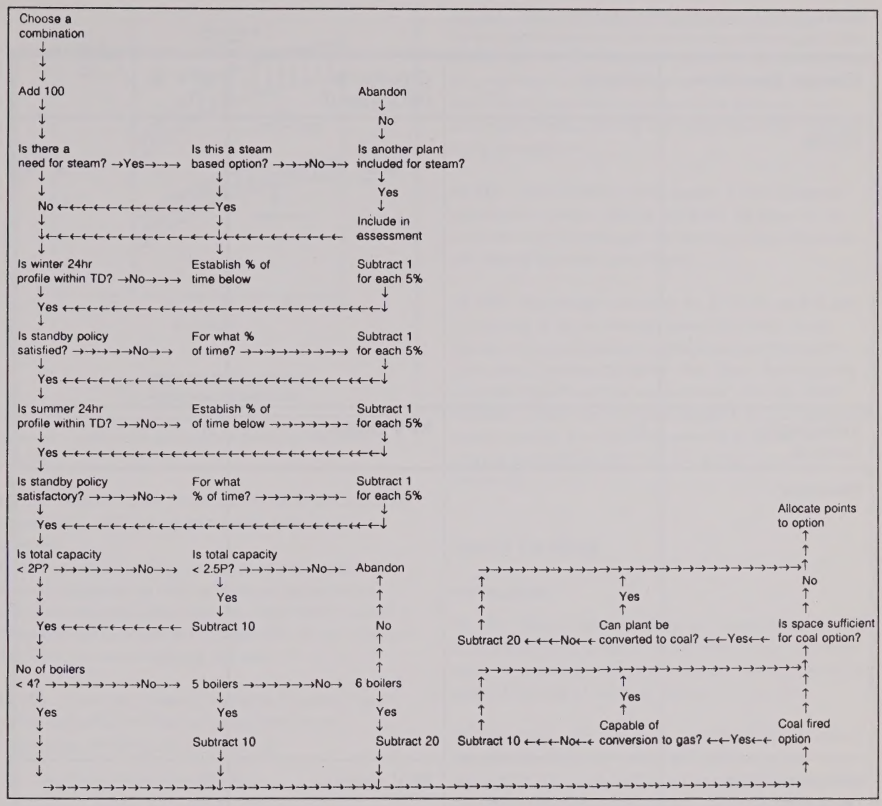

Figure 37 Flowchart for technical ranking of boiler arrangements

11.148 Figure 38 shows how to establish the initial capital cost, annual revenue costs, NPV capital, NPV revenue and total NPV for each option. The BCR can thus be readily determined.

11.149 For each option, the average on-line boiler loadings should be used to estimate the overall annual boiler efficiency and the corresponding annual fuel consumption. The fuel consumption associated with the standby boiler and auxiliary plant should also be included in the annual total.

11.150 The most suitable option is that with both a high BCR and a short, simple payback period.

11.151 Depending on the range of scheme options, the analysis can sometimes be shortened by omitting elements that are common to all options. While this method is acceptable for scheme comparisons, resulting NPV costs do not reflect the full financial implications of the various schemes.

Supplementary information

Testing and commissioning

11.152 The target or optimum boiler efficiency for a particular installation is dependent upon the boiler design, the extent of fouling of the heat-transfer surfaces, the setting of firing equipment and the applied boiler load.

11.153 It is essential that any new boiler should be given a comprehensive test to determine the operating characteristics of the clean boiler throughout its operating band. BS845 describes a suitable boiler commissioning/ acceptance test procedure.

11.154 Using the information from the above commissioning test, plus operational data from the boiler

Option _____

Element description	Cost (£)	Occurrence (19 = year 0)	NPV (£)
Capital -			
Initial capital (year 0)	A	NPV capital	B
Revenue -			
Annual revenue (year 0 or 1)	C	NPV revenue	D
Total NPV for option			E

$$\text{Simple payback} = \frac{\text{Initial capital}}{\text{Annual saving}} = \frac{A}{(C \text{ basic option} - C)}$$

$$\text{Benefit Cost Ratio} = \frac{\text{NPV savings}}{\text{NPV capital costs}} = \frac{(D \text{ base option} - D) + B \text{ base option}}{B}$$

Figure 38 Financial assessment sheet

and stoker/burner manufacturers, an operational characteristic can be constructed, as shown in Figure 39. This characteristic represents the target performance ranges against which the regular boiler efficiency checks can be monitored.

11.155 BS845 covers the testing of boilers and steam generators.

Boiler instrumentation and logs

11.156 Having installed a combination of boilers, agreed the operational policy and undertaken comprehensive commissioning tests, a continuing commitment is required to ensure that a high operational efficiency is maintained.

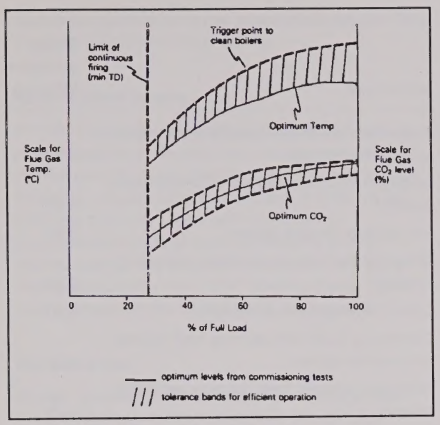

Figure 39 Typical boiler performance bands for efficient operation

11.157 Regular boiler performance checks are crucial to ensure that a high annual combustion efficiency is achieved.

11.158 Sufficient fixed or portable instrumentation should be provided to measure flue-gas temperatures, excess air rates and boiler load. This information is used to determine the combustion efficiency and can be compared directly to the commissioning test data.

11.159 There are numerous variables in addition to combustion efficiency that can affect the overall boilerhouse performance. These include:

- the total primary energy input;
- the useful (exported) boiler output;
- the on-line capacity;
- the fresh-water consumption;
- the usage of water-treatment chemicals and boiler blowdown rates.

11.160 All of the above information should be recorded on a regular basis in a boilerhouse log. It is important that an effective procedure is implemented regularly to interpret the boilerhouse log and to stimulate any necessary corrective measures.

Boiler controls and BMS

11.161 Virtually all boiler burners and stokers are supplied with individual control systems that, when correctly adjusted, provide a safe start-up and shut-down as well as a high combustion efficiency. Additional controls can be used for sequence control of multiple boiler arrangements to match the on-line capacity to the site load demand.

11.162 Both combustion and sequence controllers can be microprocessor-based as stand-alone units or part of an overall BMS. A fully integrated system can be programmed to a high level of sophistication which includes predictive load sensing and varying steam output pressures, with automatic chemical dosing and boiler blowdown related to boiler throughput.

11.163 Even where an existing BMS is not suitable for direct boiler control, most of the boiler log data can be automatically recorded and compared to base data, thus providing a full monitoring facility.

11.164 Technology is available for both the control and monitoring of an unattended boilerhouse with a high degree of pre-programmed intelligence (see the Health and Safety Executive document PM5 (Rev) 'Automatically controlled steam and hot water boilers', HMSO, 1989). However, greater operational experience of such systems is required before they become generally accepted for hospital applications. BMS are considered further in Section 22.

Space heating

Introduction

11.165 Most hospital buildings are heated either directly or indirectly using LPHW or steam from a fossil-fuel boiler plant. As a general rule, electrical space heating should be avoided because of the high primary-energy cost.

11.166 Small, personal electric convector or fan heaters are used on nearly all hospital sites, particularly in intermittently occupied areas. Although they account for a significant electricity consumption, the unjustified use of these heaters is often exaggerated.

11.167 It would be extremely difficult to quantify the electricity consumption associated with the use of these heaters in adequately heated areas and even more difficult to eradicate their use. There are a number of cases where electric heating may be viable and these are described below.

Inadequacy of existing heating system

11.168 In older buildings, typically those with old, single-pipe, cast-iron heating systems which are unable to meet the heating load, it may be viable to use supplementary electric heating, preferably with tamper-proof thermostatic control. In these cases, the cost of replacing or upgrading the existing heating system may be considerable and the necessary capital may not be available or justifiable when compared to the potential revenue saving on electricity.

11.169 When it becomes necessary to renew these heating systems, it is normal practice to install a system

that meets the heating requirements of the particular building without the need for supplementary electrical heating.

Temporary buildings

11.170 Heating systems for temporary buildings tend to be electric rather than LPHW, for convenience and lowest first cost. If a temporary building is to be used for over five years, consideration should be given to the installation of gas-fired or LPHW-based heating systems. If the anticipated use of the building is less than five years, an electric heating system which has lower capital but higher running costs may be appropriate.

11.171 Electric heating systems generally consist of either night-storage heaters, which use cheap-rate electricity, or direct radiant/convector heaters using peak-rate electricity. If a building is to have a high utilisation and life expectancy, preference should be given to night-storage heaters because of their lower running costs, although they tend to give poor control, particularly during mild weather.

Convenience of supply

11.172 In certain cases, where buildings are located on a remote site and the use of conventional heating would entail a high capital cost, the use of electric heating can provide a viable alternative on the basis of lower overall costs.

Substations and switchrooms

11.173 Because of the potential hazards associated with providing a wet heating system to switchrooms, substations, lift motor rooms etc, such systems are not recommended in these areas. The total heating requirements are generally small and the use of electric heaters is the most practical solution for these applications. Simple, tamper-proof thermostatic control is essential to avoid unnecessary waste.

Mechanical services emitters and controls

Heat emitters

11.174 The utilisation efficiency of heat emitters depends very much on the type of space, its use, and the type of control. The CIBSE 'Building Energy Code, Part 2' gives the energy utilisation efficiencies of various arrangements (see Table 17).

System type	Energy utilisation efficiency
Intermittent automatic centrally fired radiator or convector systems	0.97
Automatic centrally fired warm-air ventilation systems	0.93
Fan-assisted off-peak heaters	0.90
Direct electric (non-storage) floor and ceiling systems	0.95
District heating/warm-air systems	0.90
Continuous automatic centrally fired radiator or convector systems	1.00
Automatic centrally fired warm-air ventilation systems	1.00
Electric storage-radiator systems	0.75
Direct electric floor and ceiling systems	0.95
District heating/radiator systems	1.00
Water-heating gas circulator/storage cylinder	0.80
Off-peak storage with cylinder and immersion heater	0.80
Local instantaneous electric water heaters	1.00
Instantaneous gas heaters	0.95
District heating with local calorifiers	0.80
District heating with central calorifier	0.75

Table 17 Energy utilisation efficiencies of heating systems (source: CIBSE)

Off-peak emitters

11.175 Old off-peak electric heaters take heat at night and release it over the 24-hour cycle. However, most of the heat is emitted at night, and, unless the space is used at this time, heat is wasted. The CIBSE 'Building Energy Code' quantifies the amount of waste.

11.176 Modern off-peak heaters store more effectively and are fitted with better controls. The best units have heat output controlled by a fan switched with a thermostat. This matches the heat output to the load. The controls can incorporate a time switch.

11.177 The maximum financial effectiveness is achieved with a low-cost overnight tariff, for example, Economy 7.

Radiant energy

11.178 Where ventilation rates are very high or where large spaces need to be heated very intermittently, heat sources can be predominantly radiant in type. Direct gas-fired or electric radiant sources can produce an acceptable

standard of comfort where air temperatures are low. This can make substantial energy savings.

Radiant-panel heating

11.179 Large, low-temperature heat emitters, such as pipes embedded in the structure, tend to have a high thermal capacity. Spaces heated in this way respond very slowly to changes in heat required and, if there are any wild heat gains, the spaces tend to overheat. Consideration should be given to changing to low-thermal-capacity emitters, such as radiators with good thermostatic control. The CIBSE 'Building Energy Code' gives guidance on the savings which can be made.

Fan convectors

11.180 Intermittently heated spaces need large heat inputs at start-up. Fan convectors can provide large amounts of heat for low capital costs. Their disadvantages compared to radiators are that:

a. the radiation component of heat output is negligible;

b. the fan may be unacceptably noisy;

c. the casings are usually less robust than those of radiators.

11.181 It is bad practice to mix fan convectors and radiators on the same circuit.

Pipe insulation

11.182 The lagging of hot-water pipes against heat loss and cold-water pipes against frost damage and excessive heat gain is both essential and widely understood and practised.

11.183 Engineering Data Sheet CE11 – 'Engineering costs, economic thickness of thermal insulation', 1986, gives guidance on the insulation of steam and hot-water pipes and on insulation materials. Standards are also given in BS5422 and BS5970.

Support and reference material

Encode 1
ESAM.

Health Building Notes (HBNs)
Boilerhouse and steam boiler plant (HBN 16). DHSS, HMSO, 1965.

Health Technical Memoranda (HTMs)
Steam boiler plant instrumentation (HTM 5). DHSS, HMSO, 1963.
Sterilization (HTM 2010). NHS Estates, HMSO, 1994.
Emergency electrical services (HTM 2011):
Management policy. NHS Estates, HMSO, 1992. ISBN 0113214103;
Design considerations. NHS Estates, HMSO, 1992. ISBN 0113214081;
Operational management. NHS Estates, HMSO, 1992. ISBN 0113214111;
Validation and verification. NHS Estates, HMSO, 1992. ISBN 011321409X.

Engineering Data Sheets
CE 11.1/108 Economic thickness of thermal insulation. DHSS, 1986.
DR 6.6 Tariffs. Metering and economic use of fuels. DHSS, 1973.

British Standards (current at December 1993)
BS845 Methods for assessing thermal performance of boilers for steam, hot water and high temperature heat transfer fluids:
Part 1 **Concise procedure**. 1987;
Part 2 **Comprehensive procedure**. 1987;
BS5422 Method for specifying insulating materials on pipes, ductwork and equipment (in the temperature range –40°C to +700°C. 1990.
BS 5970 Code of practice for thermal insulation of pipework and equipment (in the temperature range –100°C to +870°C. 1992.

Department of the Environment
Energy Efficiency Office Fuel Efficiency Booklets
No 5 Steam costs and fuel savings. 1993.
No 14 Economic use of oil-fired boiler plant. 1993.
No 15 Economic use of gas-fired boiler plant. 1993.
No 17 Economic use of coal-fired boiler plant. 1993.
No 18 Boiler blowdown. 1993.

Chartered Institution of Building Services Engineers
CIBSE Building energy code.
CIBSE Guide, Volume B Installation and equipment data. Chartered Institution of Building Services Engineers (CIBSE), 1986. ISBN 0900953306:
Section B7 Corrosion protection and water treatment;
Section B13 Combustion systems.
EC01 Guidance towards energy conserving design. 1977.
EC02A Calculation of energy demands and targets for new buildings. 1981.
EC03 Guidance towards energy conserving operations. 1979.
EC04 Measurement of energy consumption. 1982.

Health and Safety Executive
PM5 (Rev) Automatically controlled steam and hot water boilers. Health and Safety Executive, HMSO, 1989. ISBN 011885425911.

Hospital Technical Notes (SHTNs) – Scotland
Domestic hot and cold water systems for Scottish health care premises (SHTN 2). Scottish Office, NHS in Scotland Management Executive, in preparation.

Contents

12.1 Introduction *page 37*

12.7 Legislation and regulations *page 37*

12.9 Building envelope and external environment *page 38*
- 12.10 Climate
- 12.16 Form
- 12.21 Orientation
- 12.25 Fabric
- 12.34 Fenestration

12.39 Roofs *page 42*
- 12.40 Pitched roofs
  - 12.41 Materials
  - 12.44 Points to consider
- 12.45 Flat roofs
  - 12.47 Points to consider
  - 12.48 Technical guidance
- 12.51 Adding a suspended ceiling
  - 12.53 Points to consider

12.54 Walls *page 46*
- 12.55 Cavity walls
  - 12.56 Points to consider
- 12.57 Solid walls
  - 12.58 Internal insulation
  - 12.61 Points to consider
  - 12.62 External insulation
  - 12.64 Points to consider
- 12.65 Timber-framed walls
- 12.67 Infill panels
  - 12.69 Points to consider

12.70 Windows *page 49*
- 12.71 Replacement windows
  - 12.72 Points to consider
- 12.73 Secondary glazing
  - 12.74 Points to consider
- 12.75 Draught-proofing
  - 12.77 Selecting a draught-seal
- 12.78 Solar-control films
  - 12.81 Points to consider
- 12.82 Solar-shading devices
  - 12.83 Points to consider

12.84 Doors *page 54*
- 12.84 Introduction
- 12.87 Draught lobbies
- 12.91 Automatic external doors
  - 12.92 Safety
  - 12.93 Form of opening
  - 12.94 Installation in conjunction with draught lobbies
  - 12.95 Re-using existing doors
  - 12.96 Control devices
- 12.97 Draught-proofing
- 12.102 Door thresholds
- 12.103 Warm-air curtains

12.106 Floors *page 57*
- 12.106 Ground floors
  - 12.107 Suspended timber
  - 12.111 Points to consider
  - 12.112 Solid concrete
  - 12.114 Points to consider
- 12.115 Upper floors

Support and reference material *page 60*

12.0 Building fabric

Introduction

12.1 This section outlines the opportunities for reducing fabric heat loss. Opportunities applying to each of the main building elements (roof, external walls etc) are described, along with the methods available and notes on some of the practical issues.

12.2 It is not possible to give precise details on how quickly insulation measures will pay for themselves, but Table 18 lists some of the common measures according to their cost-effectiveness and takes into account how easily they can be added to the building with the minimum of disruption.

12.3 While many measures can be installed with little or no disturbance to normal hospital working, some are best instituted as part of a maintenance or modernisation programme. This not only minimises disruption, but can often be much less expensive.

12.4 Figure 40 notes some of the opportunities that may arise for reducing the heat loss. Management should ensure that future plans for maintenance or modernisation work incorporate fabric insulation measures whenever possible. If the opportunity is missed, the extra cost and disruption of adding insulation at a future date will often make it less cost-effective.

12.5 Figure 41 illustrates the scope for reducing fabric heat loss. The level of savings shown will be possible only if the heating system is well controlled locally, to take advantage of the lower rate of heat loss.

12.6 Following a reminder about compliance with legislation and regulations, the section commences with an introduction to the environmental factors to be considered when incorporating energy-efficiency measures into the building fabric.

Legislation and regulations

12.7 Users are reminded about compliance with relevant legislation, including such measures as the Health and Safety at Work etc Act 1974.

Cost-effectiveness	Insulation measures (in order of cost- effectiveness)
Priority measures - excellent short term payback	* Loft insulation - Add 150mm loft insulation to uninsulated roof space. * Cavity fill - insulate cavity walls with blown-in insulant where suitable. * Draughtproofing - add draughtseals to leaky windows and doors. * Insulate suspended timber ground floors from below - if access to the underfloor space is easy adding insulation is very cost-effective. * Top up loft insulation - for lofts with only 25 or 50mm of insulation, add a further 150mm * Fix reflective foil behind radiators on external walls
Good investment when carried out as part of remedial or improvement work - provide worthwhile savings in the medium term	* Internal wall insulation - using an insulation/plasterboard laminate in place of wet plaster for upgrading or repair work. * Flat roof insulation - incorporate insulation to provide a U value of 0.35W/m^{2}K as part of the re-roofing work. * Solid floor insulation - use an insulation/chipboard laminate when replacing worn woodblock flooring or defective screeds. * Fix solar shading devices to air-conditioned areas.
Worth considering when major work is planned	* Insulate suspended timber ground floor from above - ie, where access is not possible from below. * Replacement windows to be double glazed and draughtproofed. * Internal wall insulation - applied to existing walls in good condition.
May not be cost-effective on energy grounds alone, but have other advantages eg, to extend the useful life of the building, noise control or increased comfort	* Add a draught lobby - where draughts cause discomfort. * Install automatic opening doors - to improve comfort and convenience. * External wall insulation - applied to solid walls. * Secondary glazing - add to single glazed windows.

Table 18 Cost-effectiveness of building fabric insulation measures

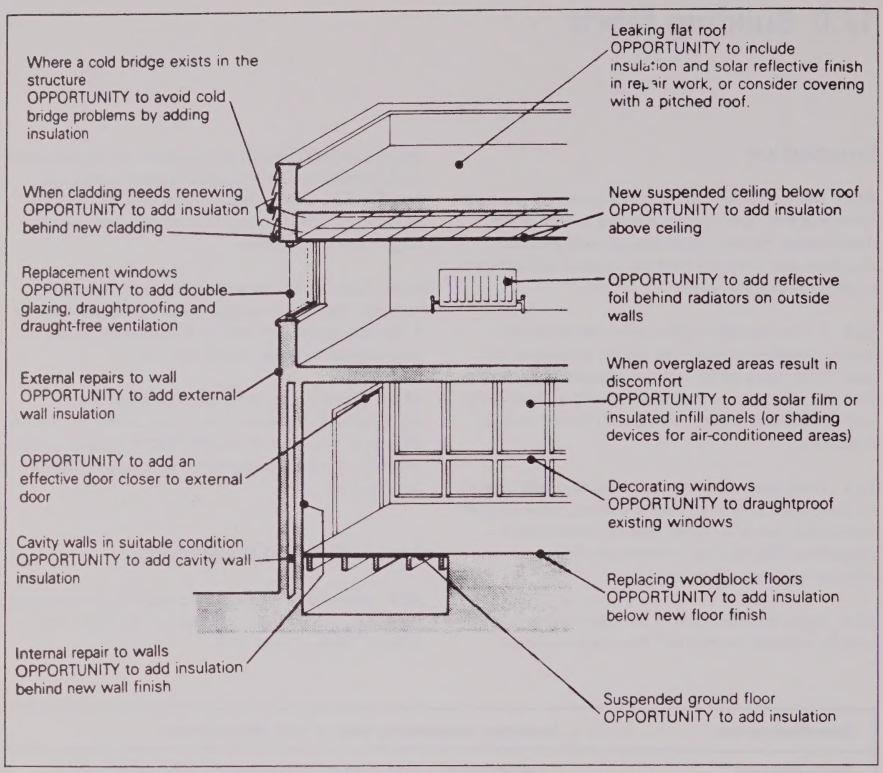

Figure 40 Building fabric insulation opportunities

12.8 All measures undertaken should satisfy at least the minimum standard requirements of the Building Regulations (and the guidance in the Approved Documents) (in Scotland, Building Standards (Scotland) Regulations, 1990 and in Northern Ireland, Planning and Building Regulations (Northern Ireland) Order 1990 and Building (Amendment) Regulations (Northern Ireland) 1991 and 1993) in instances where these are applicable, such as "material alteration". Air-conditioning and mechanical ventilation installations will be brought under the control of Building Regulations (Part L) during 1994.

Building envelope and external environment

12.9 The effect of the interaction of the building envelope with the external environment, relative to energy consumption, involves consideration of a number of variables. These can be summarised as:

a. climate;

b. form;

c. orientation;

d. fabric;

e. fenestration.

Climate

12.10 The characteristics of the climate of a particular site have a fundamental influence on the energy use of any building. The principal climatic criteria influencing energy use are:

a. air temperature;

b. wind speed;

c. solar radiation;

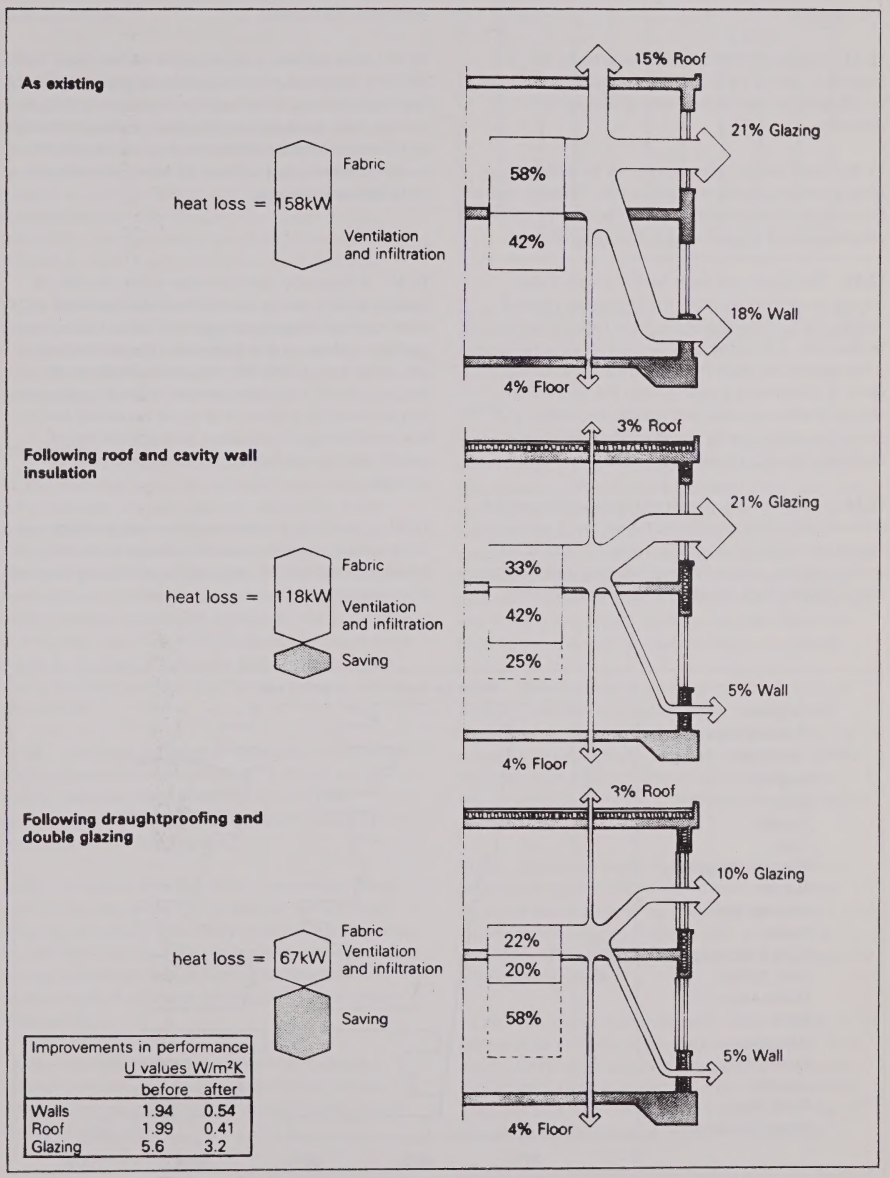

Improvements in performance	U values W/m²K	
	before	after
Walls	1.94	0.54
Roof	1.99	0.41
Glazing	5.6	3.2

Figure 41 Thermal upgrading of building fabric

d. relative humidity;

e. sky illuminance;

f. rainfall.

12.11 Access to climatic data for a particular site is important, both as input data for thermal analysis and as an influence on more general energy management decisions.

12.12 Most microclimatic factors may be analysed without recourse to thermal calculations. However, data on the principal climatic variables (listed above) are extremely valuable as input to thermal and daylighting analyses.

12.13 The simple, and more familiar, steady-state thermal models (for example, the degree-day method) require only a knowledge of the mean monthly ambient air temperature. A knowledge of the external air temperature is fundamental because the rate of heat flow through the fabric of a building is proportional to the temperature difference between inside and outside. In conditions of calm or low wind speeds, air temperature will have a dominant influence on ventilation rate.

12.14 More normally, wind speed and direction are the dominant influences on infiltration heat loss in winter and natural ventilation in summer. It is only in the most well-sealed buildings, and in the centre of deep-plan buildings, that wind speed will not affect infiltration losses. The mean wind speed for a particular site, the degree of its exposure and the direction of the prevailing wind will also influence the heat transfer coefficient of the different surfaces of the building.

12.15 Solar radiation is an important variable, both from the point of view of potentially useful solar gain during the heating season and in terms of the risk of overheating in summer. Both active and passive solar heating can make a significant contribution to meeting the heating load of buildings. Active solar heating is, however, generally not cost-effective at present.

Form

12.16 A frequently stated principle is that the ratio of building surface area to volume should be minimised in order to reduce heat loss through the fabric. This principle, applied in practice, led to deep-plan, compact buildings and, in the early 1970s, the integrated environmental design approach to building services. While this approach may minimise fabric losses, it does not necessarily lead to low overall energy consumption, owing to the loss of benefit from natural lighting, ventilation and potential solar gain.

12.17 Conversely, shallow or narrow-plan buildings may use less energy than the equivalent deep-plan building, as a result of a reduction in the need for artificial lighting and air-conditioning.

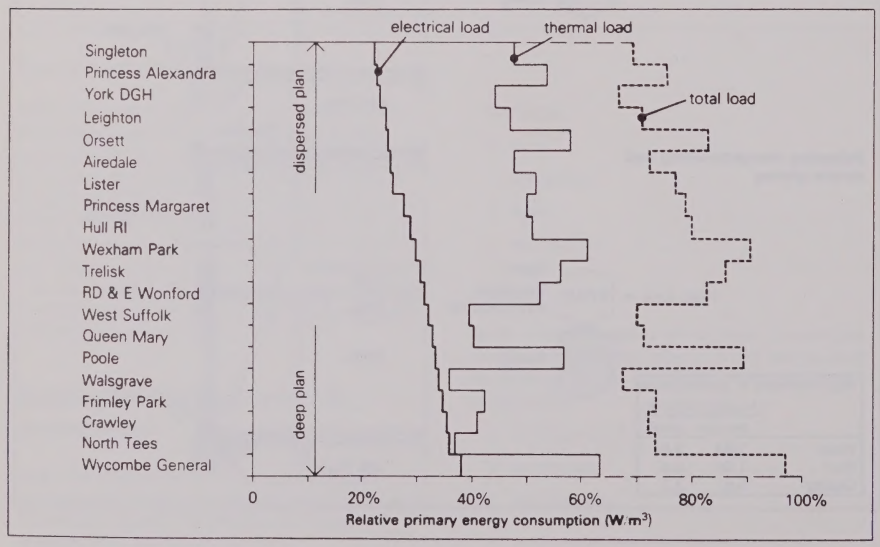

Figure 42 Comparison of thermal and electrical loads for 20 post-war acute hospitals

12.18 Perimeter areas usually enjoy the benefits of natural ventilation and daylight penetration and can be considered as distinct zones in terms of planning and building services.

12.19 Building form is influenced by the nature and location of the site (for example, tight urban sites necessitating multi-storey construction). Site constraints are often most severe in projects for extensions to existing health facilities. Results from a survey of the energy consumption pattern of 20 post-war acute hospitals (ranging in size from 300 to 1200 beds) indicate that, as buildings become more compact and deeper in plan, demand for electrical energy for lighting increases, while demand for space heating decreases (see Figure 42).

12.20 Although building form can provide a rough guide to the overall pattern of energy consumption, formal considerations should not be seen in isolation from all the other interrelated factors which will influence the actual energy consumption of the building.

Orientation

12.21 In energy terms, the principal factors associated with orientation are solar gain and daylighting. South-facing double-glazed windows show a net energy gain in all months, apart from December and January. Passive solar gain from glazed circulation spaces, such as conservatories and atria, could be feasible for both schools and other public buildings, and may be appropriate for certain areas of a hospital. The effect of direct gain on perimeter areas should be assessed to determine both useful solar gain during the heating season and the risk of overheating in the summer.

12.22 A study of the effect of orientation on a six-bed ward with a window-to-wall ratio of 0.35 and double-glazing, indicated that a south-facing room used approximately 22% less energy for space heating than a north-facing room (see Figure 43).

12.23 Unwanted solar gain in the summer can cause overheating, although it can be avoided without great difficulty. Some hospital buildings overheat even in winter, but this fault can usually be attributed to inflexible controls (or even a complete lack of them). The benefits and disadvantages of solar gain are discussed further under fenestration.

12.24 It should be noted that, apart from affecting variations in solar gain, orientation has a considerable effect on the amount of daylight available inside a space throughout the year.

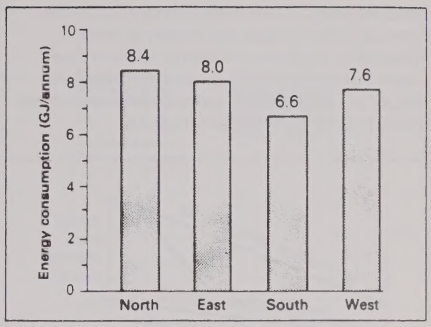

Figure 43 Effect of orientation on net heating energy use for a six-bed ward (double-glazed, window:wall ratio 0.35:1) (source: Corcoran M, 1980)

Fabric

12.25 The principal characteristic of the building fabric which affects energy consumption is the level of insulation (the *U* value in W/m^{2}K) of the perimeter walls, floors and roof. Numerous studies have shown the desirability of high levels of insulation (within limits) and this has been recognised by the gradual increase in insulation standards in Building Regulations (in Scotland, Building Standards (Scotland) Regulations and in Northern Ireland, Planning and Building Regulations (Northern Ireland) Orders and Building (Amendment) Regulations (Northern Ireland)).

12.26 There has been a tendency to think in terms of achieving component *U* values, rather than an overall building fabric *U* value. The latter approach leads to the concept of energy targets, which can encourage greater flexibility when improvements to the fabric are carried out, and an appreciation of the interrelationship of the factors involved.

12.27 It has been shown that the reduction of space-heating energy use with increasing levels of insulation obeys the law of diminishing returns. In other words, equal increments in insulation thickness form a decreasing proportion of the total resistance, and hence a decreasing return in heat saving.

12.28 This implies that an optimum fabric *U* value can be derived from a correlation of space-heating energy costs and insulation costs. However, the selection of *U* values should also take into account the effect of internal heat gains and base-load energy consumption, which may be sufficiently high to create an increased cooling load.

12.29 For example, in air-conditioned areas of a hospital with high internal gains, the thermal transmittance of the structure and the rate of fresh air supplied should be balanced to avoid the need for mechanical cooling in the

winter. However, air-conditioned areas are usually core zones, and fabric *U* values are generally far more influential on the thermal demand of perimeter zones. If good thermal insulation is provided but inadequate thought is given to controls, performance under part-load is likely to be far from ideal (see Figure 44).

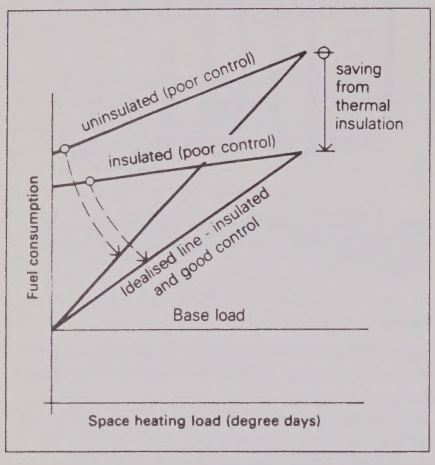

Figure 44 The effect on the fuel consumption/heating load diagram of adding thermal insulation and improving source controls

12.30 More normally, wind speed and direction are the dominant influences in infiltration heat loss in winter and natural ventilation in summer. It is only in very well-sealed buildings, and in the centre of deep-plan buildings, that wind speed will not affect infiltration losses. The mean wind speed for a particular site, the "severity" of its exposure and the direction of the prevailing wind will also influence the heat transfer coefficient of the different surfaces of the building.

12.31 Another characteristic of the building fabric is the thermal capacity of the building. All materials will absorb and store heat at different rates, giving the building the character of a thermal flywheel. It is commonly thought that construction weight has little effect on space heat requirements for continuously occupied buildings, but that lightweight construction is advantageous for intermittently heated spaces.

12.32 A lightweight building, heated on an intermittent basis, has a lower average energy consumption compared with a heavyweight building with the identical rate of heat loss through the fabric. The lightweight building does not absorb and store heat in the building fabric and consequently avoids the longer boiler start-up time required by the heavyweight building.

12.33 Construction detail is important with respect to the location of thermally massive elements. For example, the lining of a heavy construction with lightweight materials will significantly influence the thermal response of the fabric (see Figure 45).

Fenestration

12.34 Window size optimisation inevitably involves competing performance criteria. The intention should be to establish a balance between the beneficial aspects of windows (that is, daylight and passive solar gain in winter) and the disadvantage of heat losses and low mean radiant temperature (MRT).

12.35 In rooms lit from windows on one side, the minimum use of artificial lighting would be achieved with a window to wall ratio of 0.35. This assumes that the windows provide a 1% daylight factor at the bedhead furthest from the window. Through an evaluation of primary energy consumption, energy for space heating and lighting for perimeter rooms of this kind is minimised with a window to wall ratio of 0.34. This applies to single- and double-glazing arrangements (see Figure 46). Space-heating energy requirements increase with window size but not proportionately. The better insulation qualities of double-glazing compared to single-glazing result in more moderate increases with window size.

12.36 Assumptions regarding light-switching behaviour in relation to daylight are important. While window size is the primary influence on daylight distribution, window shape and external obstructions should also be considered.

12.37 Reliance on window opening for natural ventilation is commonly held to be desirable in summer, but inefficient and wasteful during the heating season.

12.38 The infiltration of outside air is a recognised source of energy loss. Infiltration occurs through many paths, the most obvious being badly fitting doors and windows. The building structure itself is also a source of leakage, often as a result of indifferent detail design, ill-fitting components, bad workmanship and cracks due to drying out or settlement.

Roofs

12.39 The opportunities for insulating a roof depend largely on its construction. Table 19 sets out a range of options for both pitched and flat roofs.

Pitched roofs

12.40 The ceilings of pitched roofs are the easiest and cheapest place to add insulation. 150 mm of insulation is the minimum thickness over heated accommodation. Where the rooms underneath are continuously heated to a

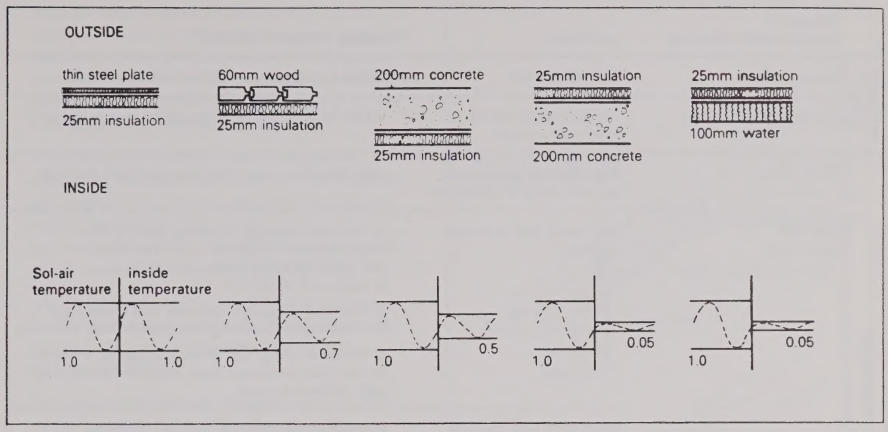

Figure 45 The effect of the location of mass and insulation on the inside surface temperature

high level (for example, ward blocks) it may be economic to use up to 200 mm of insulation.

Materials

12.41 Rolls of mineral fibre quilt are the most readily available loft insulation material. 100 mm thickness is universally available and 120 mm and 150 mm thicknesses are becoming more so, due to increased demand.

12.42 Blown fibre can also be used, but the work has to be carried out by a specialist contractor. Several Agrément Certificates have been issued for blown mineral fibre insulation. Prices are about the same as for quilt insulation, but blown fibre may work out cheaper where the spacing of ceiling joists is irregular.

12.43 Rigid insulation boards are not suitable for normal loft insulation, but recommended for use on the sloping sections of ceilings. Pushing insulation between the rafters in this position tends to restrict the roof ventilation and is difficult to supervise. It is preferable to locate an insulation/ plasterboard laminate on the underside of the ceiling and fix it through the existing ceiling (see Figure 47).

Points to consider

12.44 The following points should be considered when installing loft insulation:

a. the effect of adding loft insulation is to reduce the winter temperature in the roof space, which increases the risk of condensation occurring in the roof. This is especially so where a sarking felt has been added as part of re-roofing work. There are two main ways to combat the risk of condensation:

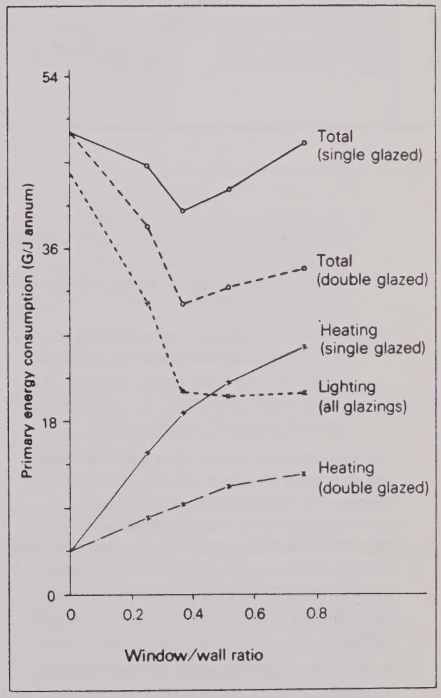

Figure 46 The effect of window:wall ratio on energy consumption of a Nucleus lower floor six-bed ward – Environmental Systems Performance (ESP) simulation (source: Corcoran M, 1980)

	Timing of improvement measure	Condition	Energy efficient options
PITCHED ROOF	At any time	Uninsulated loft	Install a minimum of 150mm loft insulation
	During upgrading work	Tall lofty space which is expensive to heat	Install false ceiling with insulation quilt laid over it
FLAT ROOF	At any time	Roof finish in good repair, but poor level of insulation	Add insulation using the 'inverted' roof principle
	With roof repair work	Roof leaks and is in poor condition	a) Remove existing insulation and lay new vapour barrier, insulation, roof membrane and solar reflective finish to provide a U value of 0.35W/m²K. b) Remove chippings, lay new roof membrane and add insulation using the inverted roof principle. c) Repair existing roof finish and use as a vapour barrier. Add insulation, new roof membrane, and solar reflective finish.
		Ponding on roof causing localised deterioration and leaks	Remove chippings, use tapered insulation boards to improve falls and finish with new roof membrane and solar reflective finish.
	With internal modernisation	Ceiling needs replacing	Place insulation above new ceiling, provided the void above can be ventilated
	With upgrading work	Structural failure of the deck	a) Renew complete roof to provide a minimum U value of 0.35W/m²K b) Convert flat roof to pitched, incorporating a minimum 100mm loft insulation

Table 19 Roof improvement opportunities

(i) the roof space should be adequately ventilated at eaves level, on opposing sides of the roof. If this is not possible, additional ventilation at the ridge or a gable wall should be introduced;

(ii) the amount of water vapour reaching the roof space should be reduced by sealing all holes and gaps in the ceiling, especially in rooms where warm moist air is generated (for example, bath and shower rooms);

b. insulation should be placed above electrical conduits and mechanical services to maintain these at room temperature. Electrical cables which are not contained in conduits should be kept above the insulation. If they are covered by insulation it may be necessary to de-rate them (see Building Research Establishment (BRE) Defect Action Sheet number 62 – 'Electrical Services: avoiding cable overheating (Design)');

c. to obtain the maximum energy savings from loft insulation, it may be necessary to adjust heating controls or rebalance radiators in order to avoid overheating;

d. insulation should not cover the walkways in the loft space. Boarded walkways over insulation should always be provided;

e. all water tanks and associated pipework, including overflows, should be insulated.

Flat roofs

12.45 Flat roofs are more difficult and expensive to insulate than pitched roofs. Where the roof has no insulation, it is unlikely to be cost-effective to add insulation solely on grounds of energy conservation. However, where a flat roof is being repaired, the opportunity to improve the insulation value should not be missed.

12.46 The best place for insulation is above the roof deck. This keeps the roof structure warm and greatly lessens the risk of condensation. The opportunity to add insulation to the specification should be considered whenever extensive repair work to a flat roof is required.

Points to consider

12.47 The following points should be considered when installing insulation to a flat roof:

a. a vapour barrier should always be placed on the warm side of any insulation. Otherwise moisture will condense on the cold surface above the insulation and cause problems. Where the existing roof finish is being retained it can act as a vapour barrier for any new insulation added to the roof;

b. the existing roof structure must be capable of supporting the additional weight of extra insulation and finishes. This may be a problem with inverted roofs if heavy ballast is specified to secure the insulation (though this may not be a requirement in all circumstances) in the event of wind uplift;

c. the height of upstands at the perimeter and at rooflights and other projections should be checked. The extra thickness of insulation may present detailing problems;

d. the compatibility between the proposed insulation material and the felt specification should be checked. Some insulants (for example urethane foam) require a partially bonded first layer, while others (for example polystyrene) require a protective layer of fibreboard to prevent them from being damaged when hot bitumen or asphalt is used.

Technical guidance

12.48 There is a wide range of roofing membranes and insulation materials on the market. The modern "high-performance" felts have shown themselves to be better at resisting the flexural fatigue which was chiefly to blame for many of the flat-roof failures in the 1970s.

12.49 The Department of Education and Science Design Note 46, 'Maintenance and renewal in educational buildings of felt roofs, criteria and methods of assessment, repair and replacement', contains useful practical advice on repairing and renewing flat roofs. Its main conclusions are that insulation preferred materials are rigid-faced polyurethane and cork. Cork is the most cost-effective insulation material.

12.50 Flat-roof construction is varied and complex and care should be taken in selecting the appropriate insulating material(s) and their location. For example, a common type is asphalt over concrete decks, and applying suitable material(s) over the asphalt (creating an inverted roof) may prove economical.

Adding a suspended ceiling

12.51 Where rooms and wards have excessively high ceilings, adding an insulated suspended ceiling can help to reduce energy consumption. This is especially so for accommodation situated directly below the roof (see Figure 48).

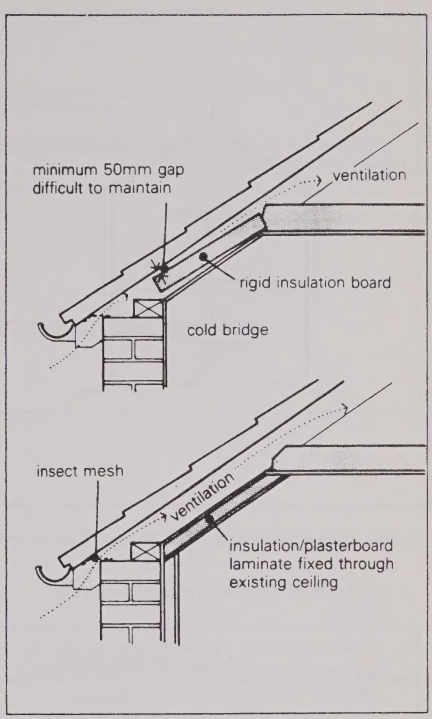

Figure 47 The use of rigid insulation on sloping ceilings

12.52 The saving in energy is due to the reduction in volume. This has two implications:

a. the heat output can be adjusted to take account of the reduction in the heated volume;

b. air-infiltration losses will be reduced in proportion to the reduction in volume, if the air change rate is unchanged following the installation of the suspended ceiling.

Points to consider

12.53 The following points should be considered when installing a suspended ceiling:

a. to reduce air movement into the ceiling void, the ceiling should be made as airtight as possible. Light fittings should therefore be surface-mounted or suspended rather than recessed;

b. insulation should be placed above the ceiling to minimise heat loss. The effectiveness of the insulation will increase with the height of the ceiling/roof void. To minimise the condensation in roof spaces, they should be ventilated to the outside air.

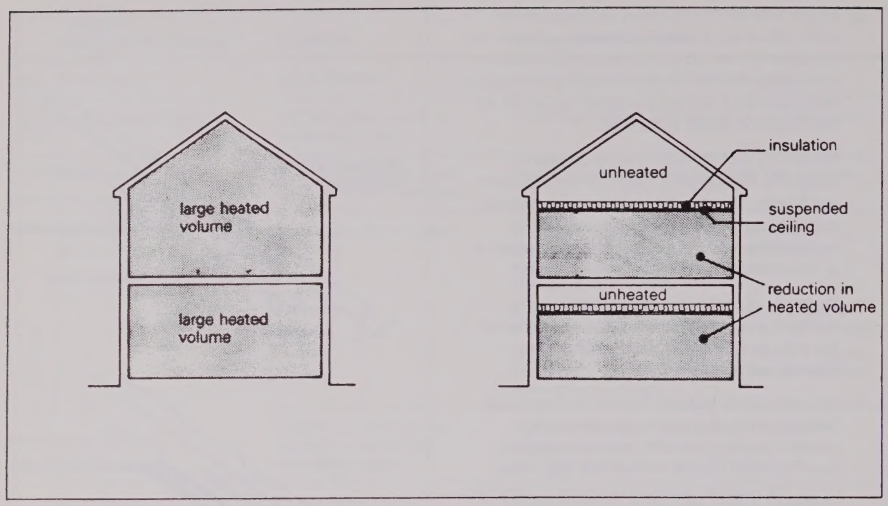

Figure 48 Using an insulated suspended ceiling to reduce the heated volume

See the earlier comments on pitched roofs for guidance;

c. it is often possible to use the heads of windows as the minimum ceiling height. It is possible to install a ceiling at a lower level and slope it up to the window head, but this complication adds to costs and can look contrived (see Figure 49);

d. lowering the ceiling height will alter the environmental conditions of a space and specialist advice may be necessary. Consideration should be given to the resulting appearance and the means of ventilation to both the heated and unheated volumes;

e. the additional weight of the insulation on existing grids.

Walls

12.54 The appropriate method of improving the thermal insulation of an existing wall will depend on its construction. Table 20 sets out the range of possibilities for four common types of external wall.

Cavity walls

12.55 Cavity insulation reduces heat loss from traditional cavity walls by about two-thirds and is relatively cheap to install. It is a very cost-effective method of insulation, but a specialist contractor is required for installation.

Points to consider

12.56 The following points should be considered when insulating cavity walls:

a. the cleanliness of the cavity is important. If it is clogged with mortar droppings or badly constructed it may be better not to insulate it. Before installation, the specialist contractor should check if there is any debris in the cavity and remove it if possible. This should avoid potential damp problems;

b. if there is widespread frost damage or persistent rain penetration, cavity insulation should be avoided;

c. it is necessary to close off the cavity at roof level to prevent the escape of insulation into the roof space. The closer can be either 9 mm thick asbestos-free building board, 38 mm thick timber, 50 mm thick wire-reinforced mineral-wool blanket, or a mineral-wool slab compressed into the top of the cavity;

d. all features which penetrate the cavity (for example, air bricks, ventilation inlets etc) should be sleeved to prevent insulation spilling from the cavity;

e. most cavity fill materials are restricted to a building height of 12 m. A few blown or injected cavity-fill materials are approved by the British Board of Agrément (BBA) for use in buildings up to 25 m high. However, walls must be well constructed and in good repair. The existing construction must be examined and approved by the installer, and certain constructions (for example, framed structures and recessed mortar joints) are not covered by the Agrément Certificates;

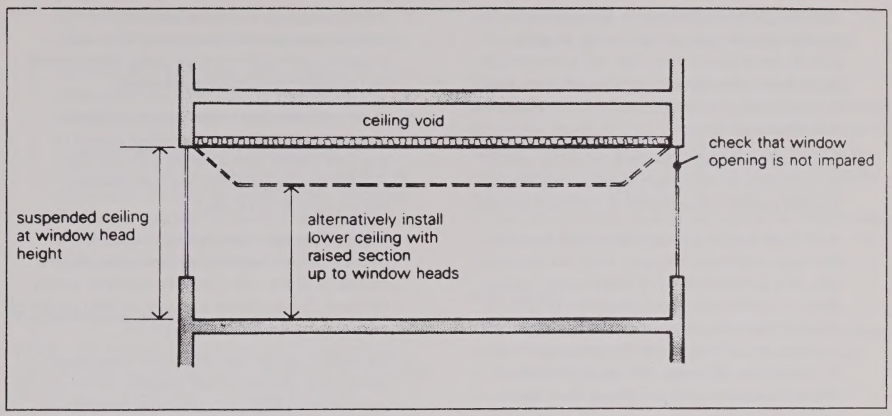

Figure 49 Position of a suspended ceiling

	Timing of improvement measure	Condition	Energy efficient options
ALL WALLS	With internal decoration	Radiators on outside walls	Fix reflective foil behind radiators
CAVITY WALLS	At any time	No damp penetration Brickwork well pointed	Inject cavity wall insulation where suitable
SOLID WALLS	With internal upgrading	Brickwork and plaster sound	Adhesive fix insulation laminate to the wall before plastering to provide a minimum U value of 0.6 minimum W/m^{2}K
		Plaster in poor condition	Remove existing plaster. Fix insulation laminate on dabs and redecorate. Aim for a minimum U value of 0.6 W/m^{2}K.
	With external upgrading	Brickwork in poor condition or dampness due to driving rain	Apply an external wall insulation system to give a minimum U value of 0.6 W/m^{2}K.
TIMBER FRAMED	With external upgrading	Timber cladding suffering from decay or excessive maintenance costs	a) Before refixing new cladding, place insulation between timber frames and provide a vapour barrier internally. b) Fix a rigid insulation board to the frame before fixing new cladding. (Aim for a minimum U value of 0.6 W/m^{2}K).
INFILL PANELS	With external upgrading	Thin infill panels and overglazing result in solar gain in summer and high heat loss in winter	Replace existing panels with well insulated sandwich panels. Aim to provide a minimum U value of 0.6 W/m^{2}K.

Table 20 External wall improvement opportunities

f. urea-formaldehyde (UF) foam is restricted to the less severely exposed parts of the country, as set out in BS5618. Most inland urban sites will be acceptable for UF foam. The company installing UF foam must be registered by the British Standards Institution (BSI) as an Approved Firm;

g. for any other material, the work should be carried out to comply with a current Agrément Certificate. The BBA publish a monthly list of approved installers;

h. as UF foam dries, it gives off formaldehyde which can cause irritation to the eyes, nose and respiratory tract, and a small minority of people suffer serious effects. Consideration should therefore be given to using UF foam only where the building can be well ventilated and is likely to remain unoccupied until the fumes have dispersed. The use of UF foam is restricted to cavities with a masonry inner leaf;

j. cavity fill in existing ventilated walls may increase the risk of corrosion of wall ties.

Solid walls

12.57 Where buildings are constructed with solid brick walls (Health Technical Memorandum (HTM) 81 – 'Fire precautions in new hospitals' recommends that new hospitals are of masonry construction), heat loss through the walls is likely to represent a large proportion of the overall heat loss, and any opportunity to add insulation should be considered. Solid walls can be insulated in one of two ways:

a. by insulating the wall internally;

b. by adding insulation externally and protecting it by a render or cladding.

Internal insulation

12.58 Internal insulation is normally cheaper than external but several times more expensive than cavity fill.

12.59 Composite boards of insulation and plasterboard are a relatively quick and convenient way of installing insulation.

12.60 Composite boards are available with a wide range of different insulation materials. Some include a vapour check between the insulation and plasterboard. Most boards are available with either tapered edges for finishing with dry-lining techniques or square edges for finishing with a skim of wet plaster.

Points to consider

12.61 The following points should be considered when installing internal wall insulation:

a. internal insulation is more appropriate for intermittently heated departments. Extensive insulation will result in a more peaky heat demand and possible summertime overheating;

b. to prevent interstitial condensation, composite boards incorporating a vapour check should be specified. Boards with a vapour check are not suitable for wet plastering and only dry-lining techniques should be used;

c. although cheaper than external insulation, the decision to use internal insulation means that the occupants of the rooms must be decanted during the work. The insulation is usually installed as part of a general modernisation programme;

d. the location of radiators and other heavy figures needs to be planned so that support battens can be appropriately positioned behind the plasterboard lining.

External insulation

12.62 The high capital cost of external insulation prevents it being cost-effective on energy-saving grounds alone. However, where the external wall requires extensive remedial action, for example to combat dampness due to driving rain, the additional cost of incorporating insulation may be worthwhile.

12.63 There are several proprietary systems on the market. New products appear regularly and the BBA provide an up-to-date list of approved systems. It is recommended that any external wall insulation system be BBA approved.

Points to consider

12.64 The following points should be considered before installing external wall insulation:

a. unless the building is already rendered, there will be a substantial change in its appearance, and planning permission may be required;

b. the ideal surface for external insulation is a plane surface with a minimum of openings, external services or architectural projections;

c. if external plumbing services are present, external insulation becomes more difficult. Rainwater downpipes, if terminating in a shoe over an open gulley, can be removed and refixed after the insulation has been installed. External soil pipes connected directly to underground drainage present more of a problem (see (d) below);

d. although simple soil pipe assemblies can be accommodated by external insulation, the additional cost of working around extensive assemblies can render external insulation uneconomic. In such cases,

stopping the insulation on either side of the pipework assembly can be an acceptable solution;

e. another factor which may make external insulation more expensive is the need to extend window cills, eaves or verges to cover the insulation;

f. a sand/cement render will need less regular maintenance than a painted finish to maintain its appearance. Smooth-rendered finishes should be avoided as they tend to develop hairline cracks and show surface damage and weather staining more readily than textured finishes.

Timber-framed walls

12.65 The concealed spaces between timber frames offer the ideal opportunity to add insulation. It is essential to take special precautions to prevent interstitial condensation. Where the insulation is placed between the timber studs, there are two essential precautions:

a. a vapour check on the warm side of the insulation. In new constructions, this is most commonly achieved by fixing a sheet of polythene immediately behind the plasterboard. With an existing wall, a special sealer which, when applied in two coats, forms a vapour barrier should be used;

b. ventilation on the cold side of the insulation. No matter how well a vapour barrier is installed, some water vapour will get through joints, holes for services etc. It is essential to provide ventilation to the outside air to encourage any moisture to dissipate rather than be absorbed by the timber.

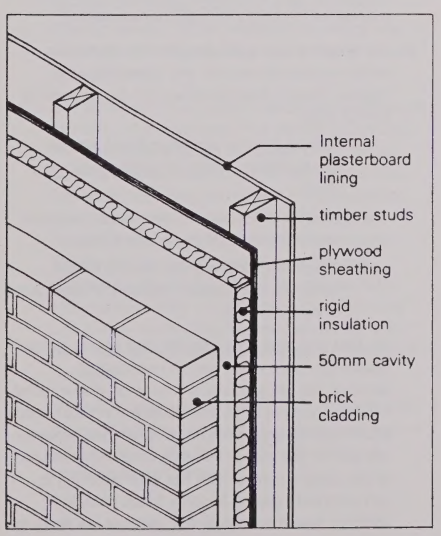

Figure 50 Timber-framed construction using "warm wall" approach

12.66 A method for insulating timber-framed walls, introduced from the USA, claims to overcome the need for an internal vapour barrier. It may be appropriate for use on existing timber-framed buildings, where the cladding is being replaced. Instead of placing the insulation between the timber studs, it is fixed to the outside face of the timber. The insulation must be in the form of a rigid board with a high vapour resistance (see Figure 50).

Infill panels

12.67 Many post-war hospitals were designed with large areas of single-glazing, often from floor to ceiling. Such external walling gives very poor thermal comfort conditions (very cold in winter and excessively hot in summer, the latter because of solar gain). A common solution is to replace thin infill panels (often just opaque glass) and some of the low-level glazing with insulated infill panels.

12.68 Infill panels are custom-made for each scheme. Edge details, external cladding material, panel thickness and insulation material can all be specified and purpose-designed. Some investigation of the existing construction is necessary in order to arrive at a satisfactory edge detail for the new panels. If necessary, the panels can be manufactured with stepped edges to fit narrow rebates (see Figure 51). Given the many options available, it is recommended that specialist advice is sought.

Points to consider

12.69 The following points should be considered before installing infill panels:

a. infill panels with a core of highly insulating material are very efficient at reducing heat loss. For example, replacing single-glazing with a panel containing 25 mm polyurethane reduces the *U* values from about 5.7 to 0.8 W/m²K, a seven-fold reduction. The mean radiant surface temperature is also much higher, thus increasing comfort conditions;

b. insulation placed behind existing plate glass panels may cause the glass to crack. Specialist advice should be sought;

c. staff may be apprehensive about a reduction in the area of glazing. This may be alleviated by detailing the proposed alterations so that they harmonise with the existing wall surfaces.

Windows

12.70 Windows are the least thermally efficient part of the building fabric. In winter, they lose more heat per

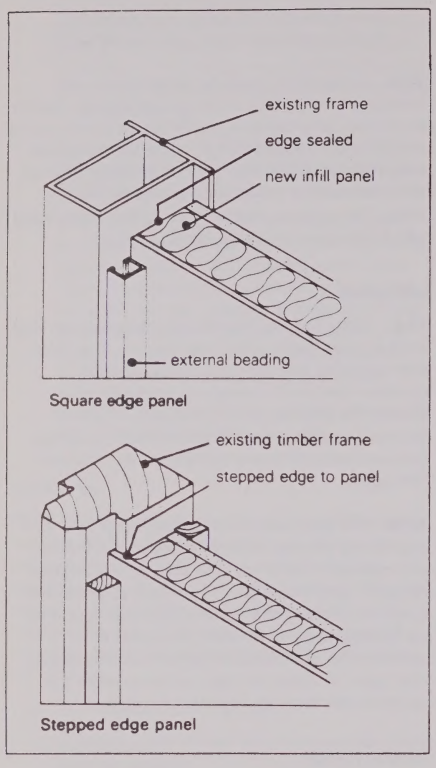

Figure 51 Infill panels, two alternative edge details

square metre than any other element, but on sunny days the solar gain through windows can make working conditions intolerable. In addition, windows account for a large proportion of the air leakage to and from the building. Table 21 sets out a range of possible improvement options.

Replacement windows

12.71 Windows are a complex component, and there are many aspects to be considered in order to achieve a sound specification and a satisfactory installation. HTM 55 – 'Windows', gives general advice on the selection and specification of windows.

Points to consider

12.72 The following points regarding replacement windows should be considered:

a. a major consideration is which frame material to specify. Timber, steel, aluminium and unplasticised polyvinylchloride (uPVC), or a combination of these are the main materials used in the manufacture of both new and replacement windows. Aluminium and, more recently, uPVC continue to increase their share of the market by offering a high-quality product with minimum maintenance. Manufacturers of timber and steel frames have replied with their own ranges of high performance windows, which are also designed to take double- or even triple-glazing and incorporate draught-proofing as standard;

b. the heat loss through a double-glazed steel- or aluminium-framed window is only marginally lower than that through a single-glazed timber-framed window, owing to the higher thermal conductivity of metals. To avoid problems of condensation on cold metal frames, windows with a "thermal break" should be specified. Several aluminium-framed window designs incorporate a thermal break. The cellular nature of uPVC frame design and construction effectively incorporates thermal breaks. They generally have a similar thermal performance to timber-framed windows;

c. consideration should be given to whether the replacements should use the same type of window opening and configuration as previously. Within an existing opening, care is required to retain an acceptable appearance. It may be desirable to change the type and number of opening lights to provide the necessary draught-free ventilation;

d. it is desirable to provide draught-free ventilation whilst maintaining security and preventing rain ingress. Draught-free ventilation can be achieved in several ways:
   (i) controllable slot ventilators fitted into the window head, which should be within easy reach;
   (ii) window fasteners with two "keep" positions to allow a small degree of ventilation;
   (iii) a high-level opening light which, for tall windows, will probably involve the installation of opening gear;

e. the best and most cost-effective time to incorporate double-glazing is when new or replacement windows are being installed. Most high-performance windows (such as uPVC) are designed to take sealed double-glazed units (with an optimum gap between the panes). The cost of installing double-glazed units at this stage is considerably less than returning to add secondary glazing at some future date. In addition, sealed double-glazed units are less likely to suffer from condensation between the panes;

Timing of improvement measure	Condition	Energy efficient options
At any time	High solar gain overloads air-conditioning	a) Fix solar shading device externally b) Apply solar reflective film to windows
With window decoration	Windows in good condition but ill-fitting	Add good quality draughtseals
	Windows in good condition but noise a problem	Fix secondary double glazing
With extensive repair or improvement work	Extensive rot in window frames	Install replacement windows with double glazing and factory fitted draughtseals.
	High heat loss in winter and solar gain in summer due to overglazing	Reduce glass area by installing insulated infill panels

Table 21 Window improvement opportunities

f. on south and west elevations, consideration should be given to the use of solar-control glass to reduce the degree of solar gain. In air-conditioned areas, solar-control glass can be very effective at reducing the cooling load in summer and should prove cost-effective. In over-glazed areas which rely on natural ventilation, solar-control glass should reduce the discomfort due to solar gain. In such situations the extra cost of solar-control glass is a relatively cheap solution compared with alternatives such as installing window air-conditioning units or external solar shading devices. The acceptability to medical and nursing staff of any resulting colour change should be established;

g. low-emissivity (low-E) glass is specifically designed to be used as the inner pane of a double-glazed unit. The glass surface facing the sealed cavity has an ultra-thin metallic coating which reduces the heat loss across the cavity and gives it a slightly bronze tint. A *U* value as low as 1.6 W/m^2K is claimed compared to about 3.0 W/m^2K for conventional double-glazing. Several replacement window companies offer low-E glass as an optional extra; others plan to offer it as standard. The high initial cost makes its cost-effectiveness only marginal for areas that are not heated continuously throughout the winter;

h. other functional requirements which may affect the choice of windows, materials and types are given in the checklist in BRE Digest 377 – 'Selection of windows by performance'.

Secondary glazing

12.73 Adding secondary glazing is unlikely to be cost-effective as an energy saver. The main reason for installing secondary glazing is likely to be either:

a. to reduce noise levels from outside;

b. to improve comfort by overcoming down-draughts from large, tall windows.

Points to consider

12.74 The following points regarding secondary glazing should be considered:

a. for noise reduction, there should ideally be a gap of 100 mm or more between the two panes of glass, and the reveals should be lined with an acoustically absorbent material;

b. the frame should be bedded on or pointed with sealant, to reduce both noise and air leakage;

c. the secondary window should open easily and allow access to open the outer windows. The design of the opening lights should allow offset ventilation (see Figure 52) to minimise noise transmission from outside when both windows are open;

d. most secondary windows are either vertical or horizontal sliders, and they should be draught-proofed. The secondary window should slide in the same direction of travel as the existing window;

e. condensation on external glazing may be a problem (this may be reduced by suitable ventilation, see Figure 52).

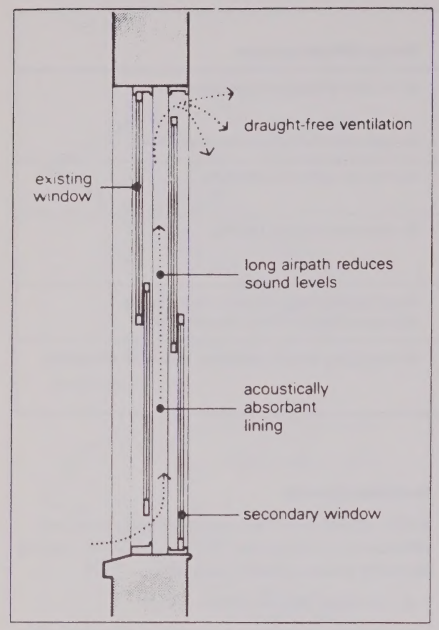

Figure 52 Using secondary glazing to provide draught-free ventilation

Draught-proofing

12.75 Fitting draught-seals should be cost-effective unless windows fit well or already have draught-stripping. As well as reducing energy loss by cutting out air leakage, draught-proofing has other advantages:

a. in winter, cold outside air leaks through the gaps between window and frame and, being denser than the warm internal air, sinks to the floor. This causes cold draughts at floor level and chills the feet and ankles of people who have to sit all day (for example in wheelchairs). Even if the rest of the room is warm, draughts can make people feel cold and uncomfortable;

b. by sealing the gaps and reducing air leakage, draught-proofing cuts down the amount of outside noise, dust and dirt that enters the building through the windows.

12.76 The "credit-card test" is a simple way of checking how well a window fits. If a credit card can be pushed between an opening light and the window frame, draught-proofing should prove worthwhile. The amount of energy saved will depend on the level of heating, the cost of fuel and how draughty the existing windows are.

Selecting a draught-seal

12.77 Figure 53 indicates which type of draught-seal is likely to perform well for the four types of window shown and the tops and sides of doors. The recommendations are based on tests carried out by the BRE. The four listed draught-seals should prove both durable and effective at sealing gaps. They have been selected so they can be fixed without the need to adjust hinges, catches etc.

Solar-control films

12.78 Where solar gain is a problem, a useful short-term solution is provided by solar-control film. These films require some skill to apply, and installation should be carried out by companies employing specially trained operatives. Many of these offer multi-purpose films which, in addition to solar control, can provide improved safety and security to the glazed area. Application of the film can be carried out at any time with minimum disruption to the occupants.

12.79 The main potential for saving energy with solar control film is in air-conditioned areas where solar gain puts a heavy load on the air-handling plant in summer. The darker the film, the better it is at cutting out solar gain. However, the darkest films cut out about 80% of natural daylight and may actually cause increased energy consumption due to the greater need for artificial lighting.

12.80 On south- and west-facing windows in naturally ventilated areas, the use of solar films may obviate the need for more expensive solutions such as window-mounted air-conditioning units.

Points to consider

12.81 The following points regarding solar control films should be considered:

a. applying film is cheaper than reglazing with solar-control glass;

b. the application of a solar-control film will improve the safety of ordinary glass. In the event of the glass breaking, the fragments are held in place by the film adhesive, thus reducing the risk of injury from flying glass;

c. the effect of any resulting colour change should be acceptable to medical and nursing staff;

d. there will be an effect on the external appearance of elevations, especially when the film is not being applied to all windows;

e. the view out should not be impaired and the room should still receive enough daylight;

f. most films are made of polyester, which is easily scratched by abrasive cleaning powder and scourers. This is one reason why films are not generally

KEY ** General use on window type
* Generally suitable, but depends on window section
X Unsuitable

Type of draughtseal	Comments	Window types: wood			steel	Door
Brush pile (nailed or screw fixing)	*Best material* Soft nylon or polypropylene pile with central fin in a PVC or aluminium holder. *Advantages* Can be fixed to cope with a wide range of gap sizes. *Disadvantages* Brush piles should be removed when repainting. Visible when window or door closed, but small PVC sections are unobtrusive. Fixing can be time consuming.	**	X	**	X	*
V section (alternative position)	*Best material* Polyester film *Advantages* Relatively cheap and easy to fix. Can cope with a wide range of gap sizes. *Disadvantages* The thin film may be prone to accidental damage, but can easily be replaced. When used as a wiper seal, it makes a 'crackly' noise when opening and closing, and can hum in high winds.	*	*	*	**	**
Tubular section (stapled through flange or glued)	*Best material* Silicone rubber *Advantages* Very durable. Flanged sections available for stapling in position. *Disadvantages* Gluing sections in place with silicone sealant needs some skill. Need to choose correct size of tubing relative to gap size.	**	**	X	**	*
Sealant	*Best material* Silicone rubber *Advantages* Very durable. Copes well with narrow and uneven gaps. *Disadvantages* Cannot cope with seasonal changes in gap size. Sealant needs to be left to cure before removing release tape and final trimming.	**	*	X	**	X

Figure 53 Selecting a draught-seal

recommended as a long-term solution. Where films are installed, liquid detergent and non-abrasive cleaning materials should be used;

g. some of the earlier films suffered badly from ultra-violet (UV) degradation and needed replacing every three to four years. The newer films contain a UV screening agent and are guaranteed for ten years or more.

Solar-shading devices

12.82 Where window replacement is not contemplated or required, but some form of solar control is needed, shading devices should be considered. There are many variations based on either louvres or blinds. Some are designed for both interior and exterior use while others are for external use only. The main variations are illustrated in Figure 54.

Shading device	% solar gain rejected compared to single glazing = (1 - shading coefficient) x 100
Venetian blind	
white internal blind	45%at 45° 65% slats closed
dark external blind	85%
Vertical roller blind	
light internal blind	60%
dark external blind	70%
Inclined blind or awning	
external	75%
External horizontal louvres	
on south elevation	75%
Vertical louvres	
internal	40 - 60%
external	85% on E/W elevations
For comparison	
white cotton curtains	50%
light density solar film	25 - 40%
high density solar film	50 - 70%
reflective solar film	65 - 80%

Figure 54 A comparison of shading devices

Points to consider

12.83 The following points regarding solar-shading devices should be considered:

a. external types are more expensive to install and maintain, but will cause less disruption to the occupants;

b. the moveable and retractable types are either power or manually operated. Power-operated types can be automatically controlled by photo-electric cells and time clocks. All manufacturers offer an installation service;

c. the view through windows may be affected;

d. vertical roller blinds are not recommended where the windows are used to provide natural ventilation;

e. the aesthetics and overall appearance of the building will be altered. Some devices project from the face of the building and may cause obstruction;

f. fixed external devices will affect the amount of daylight admitted to rooms, and this aspect should be checked. BRE Digest numbers 309 and 310 – 'Estimating daylight in buildings' provide guidance on this subject.

Doors

Introduction

12.84 Draughts through doors are a substantial cause of heat loss. The temperature difference between inside and outside will cause a natural flow of air as shown in Figure 55. Wind, and the multitude of air paths between entrance doors, along corridors and up stairs and lift wells (the "stack" effect) will tend to suck outside air deep into the building.

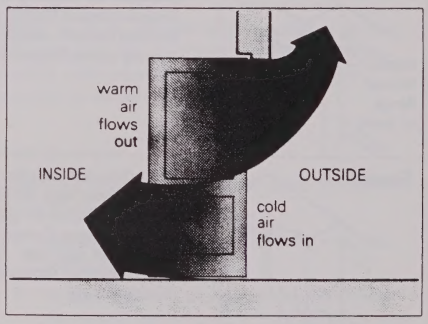

Figure 55 Airflow through an open door due to temperature difference

12.85 Measuring heat loss due to air movement of this kind is very difficult. One estimate calculated the cost of heat loss through a pair of standard entrance doors which blew open slightly in the breeze in a normal winter as £175. This increased to £2700 where they were propped open all day.

12.86 Close-fitting doors, open for the minimum length of time, should cut heat loss and dramatically improve comfort conditions for those who have to work near entrance doors. Table 22 outlines the improvement opportunities.

Timing of improvement measure	Condition	Energy efficient options
At any time	Ill fitting doors, not in regular use	Fit good quality draughtseals
	Regularly used entrance doors causing draughts when left open	Consider the following: (a) form a draught lobby (b) install automatic acting doors (c) install a warm air curtain
	Vehicle delivery doors habitually left open	Consider installing the following: (a) strip plastic door (b) automatic opening device (c) warm air curtain
During redecoration	Draught caused by spaces heated to different levels	Fit self closing doors between spaces at different temperatures - consider automatic doors where there is frequent traffic.

Table 22 Improvement opportunities for external doors

Draught lobbies

12.87 Providing a draught lobby at the entrance to a building, where there is space, can significantly reduce draughts. A draught lobby restricts the building volume that is affected by the high air-change rate associated with well-used external doors, as illustrated in Figure 56. **Draught lobbies must be adequately sized so as not to restrict movement** (as required by Health Building Note (HBN) 40 – 'Common activity spaces, volume 4, designing for disabled people' (in Scotland SHPN 40) and 'Approved Document M').

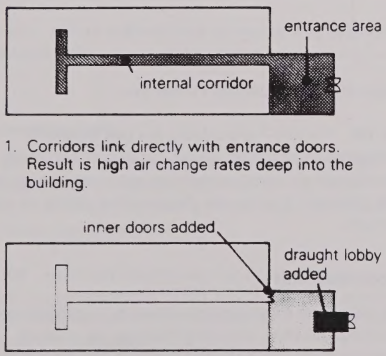

Figure 56 The benefits of a draught lobby

12.88 For draught lobbies to be effective, there must be sufficient space between the two pairs of doors so that the first set close before the second set is opened. Doorways used for beds and large trolleys should have a 4 m gap between parallel sets.

12.89 Setting the two pairs of doors at right angles to each other, if practicable, will improve draught protection, even if, on occasion, both sets are open at once.

12.90 Doors to draught lobbies should either be fitted with closers or be automatic.

Automatic external doors

12.91 Generally, consideration is given to the installation of automatic doors when draughts are causing unacceptable discomfort and considerable heat loss. Their high cost will usually restrict their use to main entrance doors. Doors which are frequently propped open for convenience, and consequently responsible for a high level of heat loss, are prime candidates for conversion to automatic doors. Consideration should also be given to installation of automatic doors when manually operated doors have suffered frequent damage from trolleys, beds and wheelchairs.

Safety

12.92 The installation should be designed and controls selected to ensure the safety of patients and staff. **HTM 81 – 'Fire precautions in new hospitals' prohibits the use of automatic doors on escape routes, even in a retrofit situation.**

Form of opening

12.93 Automatic opening and closing mechanisms are available for both sliding and hinged doors. Sliding doors are mechanically simpler to operate and cheaper than pivoting doors, but require a wider space.

Installation in conjunction with draught lobbies

12.94 See paragraphs 12.88 and 12.89 above.

Re-using existing doors

12.95 Although it is possible for automatic opening equipment to be fitted to existing doors, such installations have experienced problems and it is considered preferable for a complete new assembly to be installed.

Control devices

12.96 Various control devices are available and care is required to select the most appropriate for the circumstances. In many installations more than one type of device is fitted. There are four main forms of operating device:

a. pressure mats are located either side of a door and ensure that the door remains open whilst there is pressure on the mat. These are often used in conjunction with scanner beams. They should be adequately sized. In existing buildings, installation of pressure mats may cause damage to floor finishes such as terrazzo, which are not easily modified;

b. scanner detectors are small units, typically measuring in the range of 100 mm × 200 mm × 100 mm, installed in the ceiling or above the door. Some units use infra-red to detect the warmth emitted by an approaching person. Others use radar. The scanning range can be preadjusted to cover the most appropriate area. When radar detectors are used in conjunction with pressure mats, there should be sufficient overlap that a slow-moving or hesitant person does not have the door close when they are in the blind area. There have also been problems with patients on stretchers showing insufficient movement to keep doors open. This could be overcome by installing additional pressure mats or presence detectors. **Manufacturers should be required to give a guarantee that their mechanism will not affect cardiac pacemakers**;

c. photo-electric beam systems consist of a projector emitting an invisible light beam and a receiver at an opposite position on the walls adjacent to the doors. Both units are connected to a control pack. When the beam is broken the doors open;

d. manually operated switches are more usually installed as a backup for operation during a power failure. A battery backup is usually sufficient to operate a hydraulic door mechanism about 15 to 30 times but does not have sufficient electrical power to operate a scanner detector continuously. Switches may be installed in combination with a security device, for example, in a pharmacy area.

Draught-proofing

12.97 The draught-proofing of external doors is very cost-effective. Timber doors tend to warp way from their frames, especially at the corners opposite the hinges, and are responsible for a substantial amount of air leakage.

12.98 The gaps around steel-framed doors are likely to be smaller than those around timber-framed doors, but draught-proofing should still be worthwhile.

12.99 Modern doors of aluminium or PVC construction are designed with integral draught-proofing. Such draught-seals should remain effective for 10 years or more before they need replacing.

12.100 For the heads and sides of timber doors, thin "V"-strips made of polyester are effective at cutting out draughts. They are cheap and easy to fix using the self-adhesive backing or stapling in place (see Figure 57).

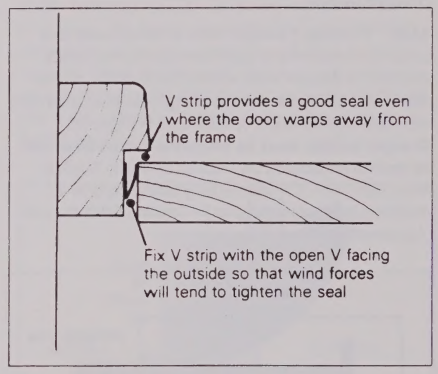

Figure 57 Draught-proofing a timber door

12.101 For steel-framed doors, the best material is probably silicone rubber sealant, but this method needs good preparation and some skill to apply well (see Figure 58). Polyester "V"-strip and silicone rubber tubing are also suitable.

Door thresholds

12.102 Flush thresholds only should be provided in new buildings. However, in existing buildings, for outward opening doors with a stepped threshold, the same type of draught-seal selected for the top and sides of the door can usually be employed. A brush-seal fixed to the back of the door provides a simple, economic solution for flush thresholds. This also applies to inwardly opening doors with a stepped threshold (see Figures 59 and 60).

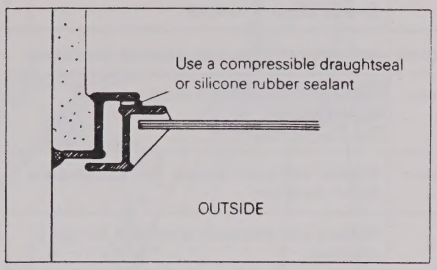

Figure 58 Draught-proofing a steel door

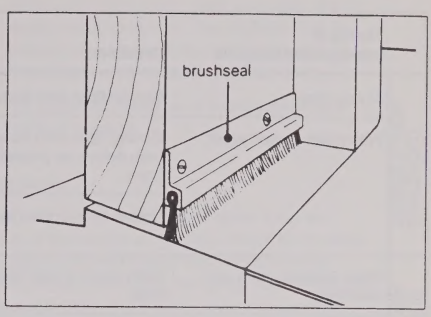

Figure 59 Fitting a brush-seal to an outward opening door with flush threshold

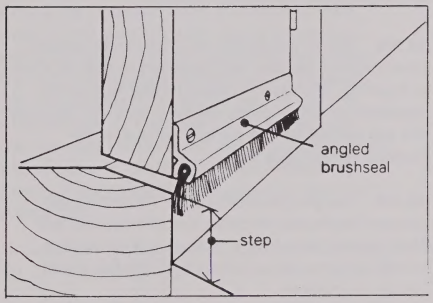

Figure 60 Fitting a brush-seal to an outward opening door with stepped threshold

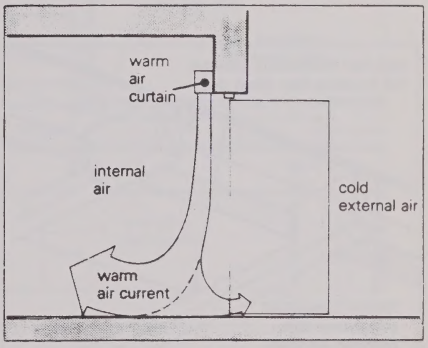

Figure 61 Warm-air curtain

Warm-air curtains

12.103 Where entrance doors are frequently used, but a draught lobby or automatic doors are not a possible solution, it is worth considering the installation of a warm-air curtain (see Figure 61).

12.104 Electrically heated warm-air curtains are easy to install, but very expensive to run. It is preferable to install a fan coil warm-air unit if it is possible and if it is convenient to route the pipework.

12.105 The extra heat output from the warm-air curtain should be offset by removing or shutting off heat emitters elsewhere in the entrance area.

Floors

Ground floors

12.106 The opportunities to insulate the ground floor depend largely on whether the floor is suspended timber, or solid concrete (see Table 23).

Suspended timber

12.107 Adding insulation between the floor joists of timber floors should be cost-effective provided there is ready access from below (see Figures 62 and 63).

12.108 Where access to the underside of the floor is not possible, the opportunity to insulate will be when floorboards need to be taken up over an extensive area. This is only likely to happen as part of a major

	Timing of improvement measure	Condition	Energy efficient options
SUSPENDED TIMBER FLOOR	At any time	Ground floor with easy access	Infill between joists with insulation from below
	With modernisation work	Ground floor with no access from below, or projecting floors	Take up floorboards and install insulation between joists
		Timber floor in poor condition	Replace with solid concrete floor incorporating 50mm insulation
SOLID FLOOR	When replacing worn out floor finish	Badly worn timber block floor	Replace with chipboard or plywood on rigid insulation
	At any time	Exposed or projecting floor	Line soffit with insulation and cover with protective layer

Table 23 Improvement opportunities for floors

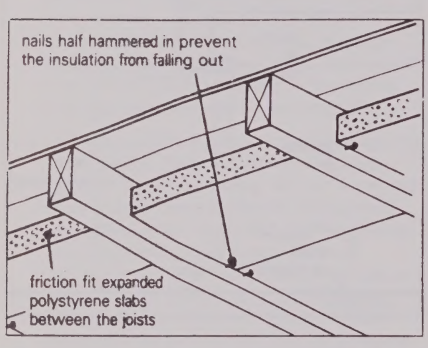

Figure 62 Fitting polystyrene insulation from below

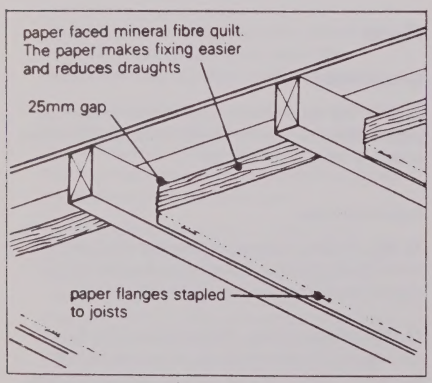

Figure 63 Fitting mineral fibre quilt insulation from below

modernisation programme. When the opportunity arises, it would be worthwhile adding insulation.

12.109 Slabs of polystyrene insulation can be pushed down between the joists and supported on nails, as shown in Figure 62. Alternatively, rolls of mineral fibre can be supported on wire or plastic netting draped over the joists. This last method requires the total removal of the floorboards (see Figure 64).

12.110 Draughts percolating under the skirting and between floorboards are as big a problem as heat loss. Most hospital floors have a continuous finish which is turned up and sealed at skirting level, and this should obviate this problem.

Points to consider

12.111 The following points regarding insulation of suspended timber ground floors should be considered:

a. the ventilation below should be maintained;

b. the location of heating pipes below should be avoided. Where it is unavoidable, the pipes should be insulated;

c. electrical cables sheathed in polyvinylchloride (PVC) should be placed in conduit or otherwise protected from direct contact with expanded polystyrene. Prolonged contact will cause a loss of plasticity from the PVC and consequent embrittlement and fire risk.

Solid concrete

12.112 The opportunities for insulating existing solid ground floors are very limited. The opportunity to add insulation occurs only where an existing floor finish (such as old, wood block flooring or a cracking screed) needs replacing.

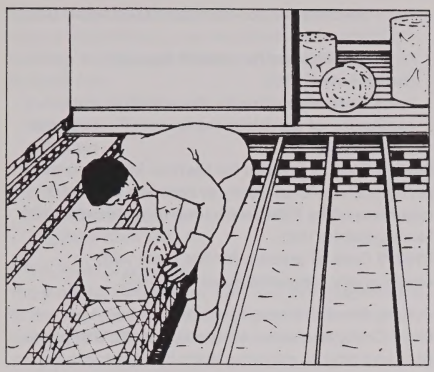

Figure 64 Installing insulation from above

12.113 The best method of adding insulation is to use a laminate of chipboard and polystyrene (see Figure 65). A flooring grade chipboard which is moisture resistant and usually tinted green (BS5669), should be specified. Extruded polystyrene is the most commonly used insulant because of its high moisture resistance and compressive strength. It is available in 16 mm, 20 mm, 25 mm and 50 mm thicknesses. The laminate boards are laid loose over the slab and the tongue and grooved joints are glued. There should be a 10 mm expansion gap between the chipboard and the perimeter wall to allow for movement of the chipboard.

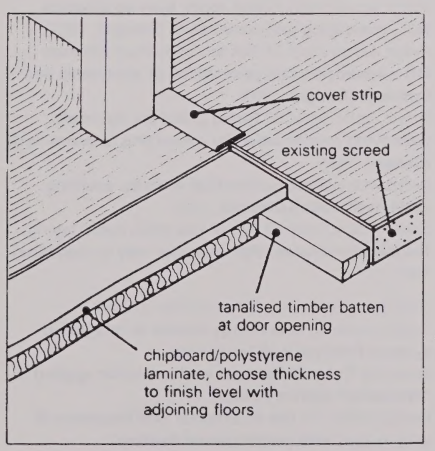

Figure 65 Insulating a solid concrete floor

Points to consider

12.114 The following points regarding insulation of solid concrete ground floors should be considered:

a. being a dry construction, there is no delay due to drying-out of screeds etc. The chipboard can be walked on as soon as it has been laid and is immediately ready to accept the floor finish;

b. the chipboard should be of flooring grade and moisture resistant.

Upper floors

12.115 Where the undersides of upper floors are exposed to the outside air, the floor should be insulated. With suspended timber floors this is easily done by removing a few floorboards and laying mineral fibre quilt between the joists. This is fairly cheap and very cost-effective (see Figure 66).

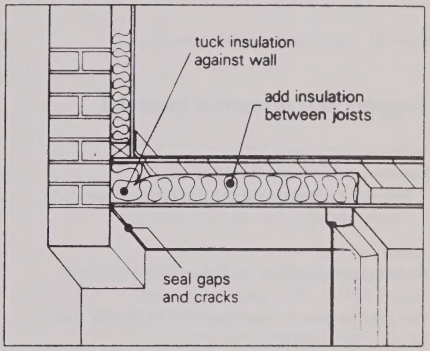

Figure 66 Insulating an exposed timber floor

12.116 With solid floors, the only realistic position for adding insulation is on the underside of the slab. The ease with which this can be done and its effectiveness will largely depend on the configuration of the concrete soffit.

12.117 A simple method of adding insulation is to use a laminate of insulation and a non-asbestos building board (Figure 67). A 50 mm or 75 mm thickness of insulation such as expanded polystyrene should be specified. Where the laminate is fixed directly to the soffit, any projecting downstand beams will form cold bridges. The cold bridges can be eliminated by enclosing all the concrete in the insulating laminate, but the extra cutting and fixing will increase costs considerably.

12.118 An alternative would be to use one of the spray-on insulations, such as polyurethane or mineral fibre. These can easily cope with complicated shapes and profiles. However, sprayed insulation normally needs a protective finish either to comply with the surface spread of flame requirements or to provide weather protection.

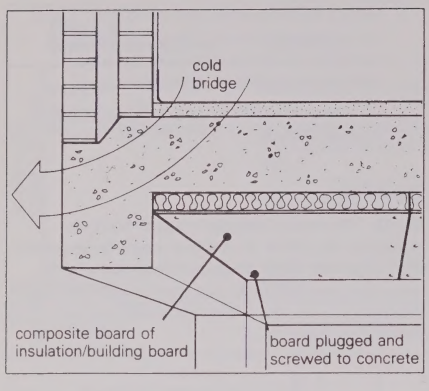

Figure 67 Insulating an exposed timber floor

Support and reference material

Health Building Notes (HBNs)
Common activity spaces (HBN 40):
Volume 4 – Designing for disabled people. NHS Estates, HMSO, 1989. ISBN 0113211988.

Health Technical Memoranda (HTMs)
Building components: Windows (HTM 55). NHS Estates, HMSO, 1989. ISBN 0113212380.
Fire precautions in new hospitals (HTM 81). DHSS, HMSO, 1987. ISBN 0113210825.
Fire precautions in new hospitals (HTM 81) Supplement 1. NHS Estates, HMSO, 1993. ISBN 0113214243.
See reference to HTM 85 below.
Fire safety in healthcare premises (HTM 88). DHSS, HMSO, 1986. ISBN 0113208014. (To be revised.)

Department of the Environment
The Building Regulations 1991. HMSO.
The Building Standards (Scotland) Regulations 1990. HMSO, 1990.
Planning and Building Regulations (Northern Ireland) Order 1990 and Building (Amendment) Regulations (Northern Ireland) 1991 and 1993.

Home Office
Draft guide to fire precautions in hospitals. 1982.
Replaced by **Guide to fire precautions in existing hospitals (HTM 85)**, HMSO, 1994.
Draft guide to fire precautions in existing residential care premises. HMSO, 1983. ISBN 0862520843.

British Standards (current at December 1993)
BS5669 Particleboards:
Part 1 **Methods of sampling, conditioning and test**. 1989;
Part 2 **Specification for wood chipboard**. 1989;
Part 3 **Specification for oriented strand board (OSB)**. 1992;
Part 4 **Specification for cement bonded particleboard**. 1989;
Part 5 **Code of practice for the selection and application of particleboard for specific purposes**. 1993.
BS5618 Code of practice for thermal insulation of cavity walls (with masonry or concrete inner and outer leaves) by filling with urea-formaldehyde (UF) foam systems. 1985.
BS6229 Code of practice for flat roofs with continuously supported coverings. 1982.

Building Research Establishment (BRE)
BR 43 **Cavity insulation of masonry walls, dampness risks and how to minimise them (for new and existing walls)**. 1983.
Digest 309 **Estimating daylight in buildings: Part 1**. 1986.
Digest 310 **Estimating daylight in buildings: Part 2**. 1986.
Digest 377 **Selecting windows by performance**. 1992.
Defect Action Sheet 1 **Slated or tiled pitched roofs: ventilation to outside air (Design)**. 1988.
Defect Action Sheet 3 **Slated or tiled pitched roofs: restricting the entry of water vapour from the house (Design)**. 1982.
Defect Action Sheet 4 **Pitched roofs: thermal insulation near the eaves (Site)**. 1982.
Defect Action Sheet 6 **External walls reducing the risk from interstitial condensation (design)**. 1982.
Defect Action Sheet 33 **Flat roofs: built-up bitumen felt – remedying rain penetration (Design)**. 1983.
Defect Action Sheet 34 **Flat roofs: built-up bitumen felt – remedying rain penetration at abutments and upstands (Design)**. 1983.
Defect Action Sheet 59 **Felted cold-deck flat roofs: remedying condensation by converting to warm-deck (Design)**. 1984.
Defect Action Sheet 62 **Electrical services: avoiding cable overheating (Design)**. 1985.
Defect Action Sheet 63 **Flat or low-pitch roofs: laying flexible membranes when weather may be bad (Site)**. 1985.

DHSS Energy efficiency demonstration schemes
Project profile 30 **Low energy houses as integrated systems (internal wall insulation)**.
Expanded Profile 88 **External wall insulation applied to "Wollaway" system homes**.
Project Profile 110 **Use of external wall insulation in conjunction with partial central heating**.
Project Profile 163 **Energy conservation of early system-built schools (upgrading infill panels)**.
Project Profile 209 **Application of internal wall insulation to inner city terraced houses on Merseyside**.

Barbour Index Building Law Microfile
Barbour Index Building Law Microfile **Health service building design, operations and maintenance**.
Available from:
Barbour Index plc
New Lodge
Drift Road
Windsor
Berkshire
SL4 4RQ
Telephone 0344 884121.

British Board of Agrément
The Building Regulations 1985 and 1991 Supplement to the approved documents (Agrément Certificate Index). HMSO. (Lists roofing membrane products approved by the BBA.)

Department of Education and Science
Design Note 46 **Maintenance and renewal in educational buildings, flat roofs. Criteria and methods of assessment, repair and replacement**. 1985.

NHS Continuing Education Unit
Flat roof manual, a guide to the repair and replacement of built-up felt roofs.

Contents

13.1 Introduction *page 65*

13.5 Waste heat boilers *page 65*
- 13.7 Cost-benefit analyses
- 13.9 Benefit Cost Ratio (BCR)
- 13.10 Performance
- 13.12 Technology
- 13.13 Decision routes

Support and reference material *page 67*

13.0 Waste heat recovery

Introduction

13.1 This section covers the recovery of usable heat from the burning of waste, usually in association with hospital boiler systems. Heat recovery from other sources is dealt with in Section 14, Ventilation and air-conditioning, Section 15, Heat pumps, and Section 23, Laundries. Any consideration of the use of waste as fuel should take account of the volumes necessary to maintain a useful heat output and of the movement of the European Commission (EC) and the Royal Commission on Environmental Pollution towards waste minimisation.

13.2 Hospital waste is burned to render it safe for disposal as ash. The process also produces gases from combustion. Both these products, and the use of combustion fuel, have an environmental impact. There are several environmental criteria which must be satisfied in the burning of waste, in order to provide fully acceptable control of the solid and gaseous effluents from the process.

13.3 Following environmental and safety legislation, Waste Regulation Authorities (WRA) are required to enforce stringent standards on producers of waste and disposal operators and plant. New licensing arrangements were introduced in 1991. These cover, for example, waste storage, handling and loading, spoil removal and disposal, operation temperatures, emission limits etc. See 'A strategic guide to clinical waste management', NHS Estates, 1994.

13.4 While this section concentrates on waste heat recovery boilers, various other systems have been postulated. Waste-burning boilers are an example. So far, where these are able to attain the required environmental standards, thermal performance is not always achieved.

Waste heat boilers

13.5 Heat recovery from the incineration of waste may be a worthwhile consideration. A waste heat boiler (WHB) offers a method of coping with large variations of waste character. The performance of such systems depends on the calorific value of the waste, which is variable and unpredictable. The available heat recovery and/or throughput may be significantly less than expectations. WHBs should be installed separately from the incinerator proper. They allow several features to be realised:

a. burning of waste can continue even if the boiler is out of use or not needed;

b. gases can be temperature-controlled before entering the boiler, so preventing corrosive deposits;

c. toxic or potentially toxic substances within the waste can be destroyed at high temperatures without the risk of cooling or chilling on boiler surfaces before the hazardous components are fully destroyed.

13.6 This process can be quite efficient, and much of the heat from support fuel (gas or oil) used for incineration is recovered.

Cost-benefit analyses

13.7 It is necessary to assess each potential application fully to identify when the financial returns may be sufficient. There are many variations possible to achieve a technically correct installation and different levels to which it needs to be equipped and instrumented, mainly according to the working pressure of the heating system.

13.8 It is not possible to arrive at an estimate of recovered heat unless careful account is taken of the effect of operational disciplines. The way in which a facility is managed can make a great difference to the heat recovery. It is better to have a lower-output heat-recovery unit which can be kept fully utilised, than a larger one which both involves higher capital outlay and is only partly effective.

Benefit Cost Ratio (BCR)

13.9 Provided that some costs of the incinerator plant are allocated to waste disposal, the BCR will usually be better than 2.0. Even if all costs of operation are charged against heat recovery, the BCR will often be better than 1.0.

Performance

13.10 It is emphasised that the successful installation of a WHB in hospitals needs the application of reasonable management discipline to maintain the tempo of operations and maintenance. Both the arrival of waste at the incinerator and its loading in a practical rhythm are essential to success, as the consumption of fuel in unattended operation periods is economically punishing.

13.11 Incinerators differ from fired boilers in one important aspect – the incinerator air supply is usually fixed (or nearly so) and the waste must be provided as necessary. Consequently, if waste supplies are uneven, some of the air entering the incinerator is unused by combustion and passes to the boiler too cool to give useful

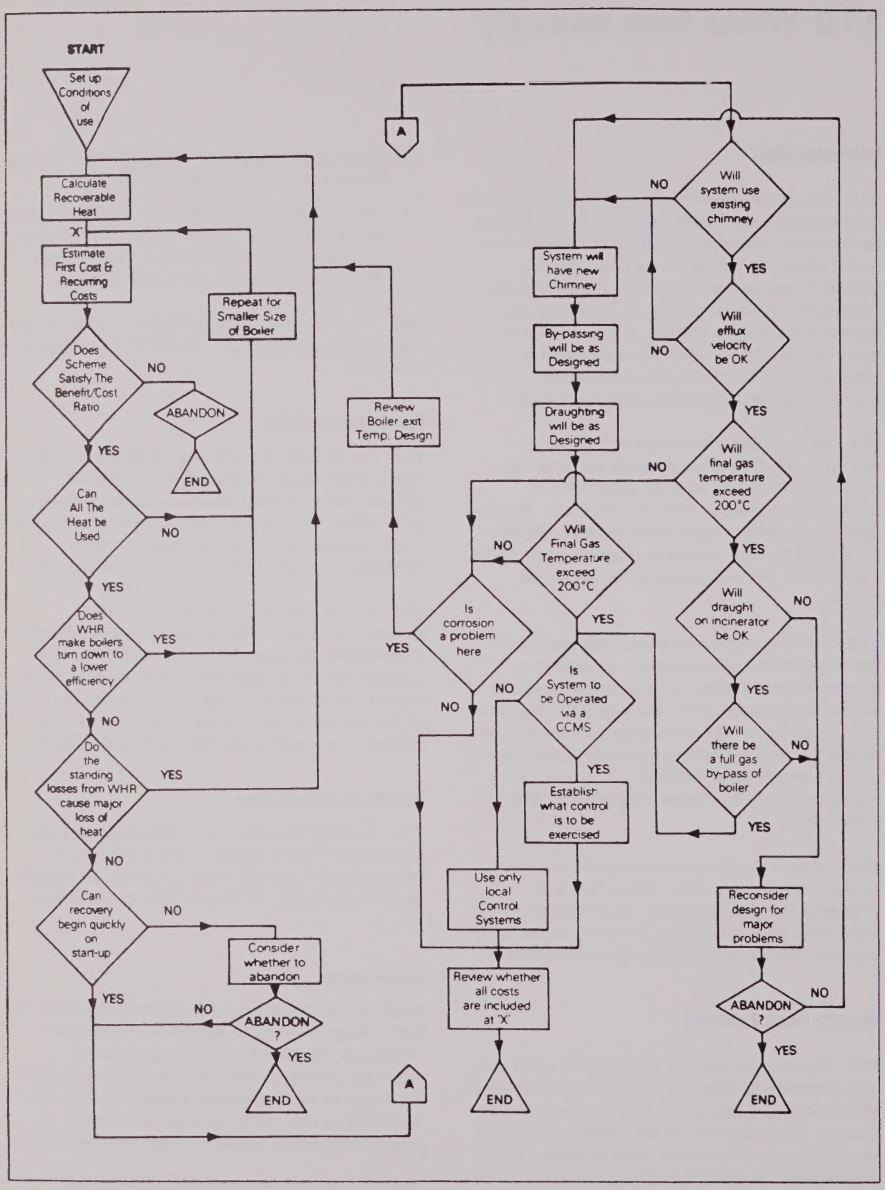

Figure 68 Decision chart for waste heat recovery from incinerator plant

recovery of heat; such losses can be serious. The performance also varies according to whether all of the combustion products from burning of waste are passing to the boiler or are partly by-passed for reasons of heat load or design of the system.

Technology

13.12 There are a number of well-established methods of installing a WHB. The water and steam side of a heat-recovery system does not differ from that of any other boiler, and only the waste gas side arrangements require separate consideration.

Decision routes

13.13 See Figure 68.

Support and reference material

Command Papers
Command Papers Cm 2181 **Seventeenth report: incineration of waste**. Royal Commission on Environmental Pollution – Sir John Houghton (Chairman). HMSO, 1993. ISBN 0101218125.

Strategic Guides
A strategic guide to clinical waste management. NHS Estates, 1994.

Contents

14.1 Introduction *page 71*
- 14.7 Central station air-conditioning plant
- 14.13 Local unit air-conditioning plant

14.15 Heat recovery from air *page 72*
- 14.20 Heat wheels or regenerators
- 14.24 Plate heat exchangers or recuperators
- 14.27 Heat pipes
- 14.28 Run-around coils

14.30 Conversion to variable air volume (VAV) operation *page 73*

Support and reference material *page 75*

14.0 Ventilation and air-conditioning

Introduction

14.1 Energy-saving measures in ventilation and air-conditioning systems must not compromise microbiological safety in areas such as theatres, pathological laboratories, post mortem (PM) rooms/ mortuaries and other ultra-clean environments. The agreement of the Control of Infection Officer should be obtained in all such cases. Guidance on the ventilation of operating departments is given in Engineering Data Sheet DV4 – 'Ventilation of operating departments, a design guide' (subsumed by Health Technical Memorandum (HTM) 2025 – 'Ventilation of healthcare premises', HMSO, 1994). Guidance on pathological laboratories is given in Health Building Note (HBN) 15 – 'Pathology services' (in Scotland, Scottish Hospital Planning Note (SHPN) 15, in preparation), and on mortuaries/PM rooms in HBN 20 – 'Mortuary and post-mortem rooms'. See also the appropriate Health and Safety Commission documents (see references below).

14.2 In order to address the issue of energy efficiency in ventilation and air-conditioning systems, some technical description is necessary as they can be varied and complex. The ventilation and air-conditioning load can represent a very significant proportion of the energy load and up to 40% of the total electricity (the most expensive energy form) demand. It can be as much as 25% of the hospital's total fuel bill.

14.3 It is an area which must be critically audited, particularly for large and deep-plan hospitals or those of a modern design, with significant amounts of environmental plant. It can be very worthwhile and cost-effective to employ a specialist consultant to look at this aspect alone.

14.4 In older-type hospitals especially, it is now both fashionable and good environmental sense to investigate the potential for a return to a more passive approach to energy in order to achieve an acceptable internal environment. The most effective way to save both energy and cost is to reduce the amount of ventilation, which can in turn reduce the heating and cooling loads.

14.5 Even in some newer hospitals, the reduction in ventilation has been welcomed by both staff and patients, but such steps must be taken in clinical areas only with the full participation of the Control of Infection Officer. The fan power of a ventilation system is related to the square of the air movement. A modification that reduces the air change by a half will reduce the electrical energy consumption by 75%.

14.6 There are two basic types of air-conditioning arrangements utilised in hospitals and these will be examined in turn:

a. central station air-conditioning plant;

b. local unit air-conditioning plant.

Central station air-conditioning plant

14.7 Full-scale air-conditioning systems will incorporate some or all of the following processes, dependent upon the requirements of the application:

a. cooling and dehumidification;

b. humidification;

c. heating.

14.8 The cooling and dehumidification load is served by a refrigeration plant and information on this subject is provided in Section 19.

14.9 The humidification process generally uses steam humidifiers. The alternative wet-cell and spinning-disc humidifiers, which were based on direct air-to-water contact, should be phased out because of the problems associated with legionella (see HTM 2040 – 'The control of legionellae in healthcare premises – a code of practice').

14.10 High humidification loads occur during peak winter periods and the use of the electrically heated humidifiers has resulted in a substantial increase in hospital electricity consumption and cost.

14.11 The steam humidification process involves injecting live steam directly into the airstream. The principle of generating steam locally, in preference to a central source, is sound. If electricity is used for steam generation, a relatively cheap source should be available, such as combined heat and power (CHP) units.

14.12 The use of electricity for air heating should not be particularly common, in view of the high running cost when compared with the alternative low pressure hot water (LPHW) or steam systems. However, there are a few situations where a convenient LPHW or steam supply is not available and electric air-heater batteries have been installed. These applications are generally limited to remote or additional reheater batteries and frost coils on older plant.

Local unit air-conditioning plant

14.13 The number of room air-conditioning units (or split systems) installed in hospital buildings has increased considerably in recent years. This is probably because of the increasing use of electronic equipment and computers which can have appreciable heat emission, resulting in uncomfortably high internal temperatures during the summer months.

14.14 Whenever room air-conditioning units are installed, simultaneous heating and cooling should be avoided. The existing heating system should be isolated or its control should be interlocked with the air-conditioning unit's cooling control to prevent simultaneous operation. Building management systems (BMS) can play a useful role here (see Section 22).

Heat recovery from air

14.15 Mechanical supply and extract systems discharge room air to the atmosphere and mechanically produced heat or coolth often goes with it. Where the room does not produce contaminants, and temperature (or humidity) is mechanically controlled, extract air is usually recirculated, with control dampers to ensure a minimum of fresh air for ventilation (see Figure 69).

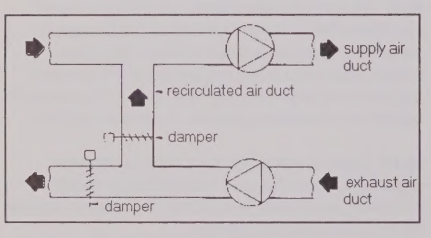

Figure 69 Diagrammatic representation of an air recirculating system

14.16 This method is the first option for minimum energy usage and is often incorporated in purpose-made air-handling systems. Where an existing system has no recirculation, and the air is not contaminated, the modifications necessary to provide recirculation should be considered.

14.17 Where air is contaminated, and consequently cannot be recirculated, four methods of heat recovery, which take either heat or coolth from the extract air and transfer it to the supply air, can be evaluated. All these methods involve:

a. modifications to supply and extract ductwork to insert heat-recovery systems, nearly always with an enlargement transformation piece on both sides of the heat-recovery device;

b. an increase in the air system resistance against which the supply and extract fans have to work. This may mean an increase in fan speed (and possibly motor size) or, more rarely, a change of fan size or type.

14.18 It is advisable that a replaceable filter is fitted in front of the heat-exchange surface in exhaust systems.

14.19 The first three methods depend upon the supply and extract ductwork being brought together to a single position for heat transfer directly from one airstream to the other. These are heat wheels (sometimes called heat regenerators, or simply regenerators), plate heat exchangers (also called heat recuperators, or recuperators) and heat pipes.

Heat wheels or regenerators

14.20 These consist of a heat exchanger rotating slowly in both airstreams. Heat is transferred to (or from) the exchanger part in the extract airstream, the heat exchange rotor then moves into the supply airstream where the heat is given up (or absorbed). The rotor is turned by a small electric motor (see Figure 70).

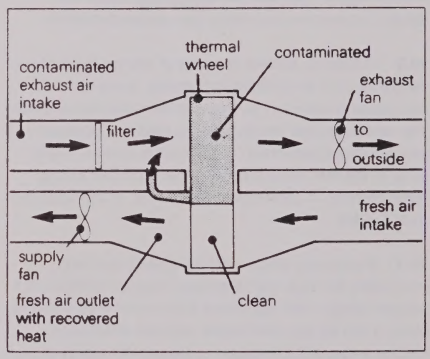

Figure 70 Heat wheel and its installation in ductwork

14.21 The location of the regenerator with respect to the supply and extract fans is important. The pressure on the supply-duct side at the regenerator needs to be slightly higher than that of the extract-duct side, so that contaminated extract air is not carried through the seals between the ducts. A section of the wheel is often arranged to bleed air directly from the supply to the extract, to blow contaminants off. This is claimed to reduce cross-contamination to a fractional percentage.

14.22 The thermal and ventilation performance losses through this purger arrangement and the seal leakage are critically dependent on the pressure difference between the two ducts. Achieving this in retrofit practice with existing fans may not be possible. The extract fan must not

be run without the supply fan, otherwise cross-contamination can be facilitated. Extract air must be filtered immediately before the thermal wheel, to maintain original thermal efficiency.

14.23 Regenerators generally have a larger duct area, a slightly higher theoretical heat recovery and a higher cost, but take up less duct length than flat-plate exchangers.

Plate heat exchangers or recuperators

14.24 These are designed with air-tight seals between flat plates, which transfer heat through the plates from one airstream to the other (see Figure 71). Each airstream is subdivided and, typically, the plates are about 6 mm to 8 mm apart. For applications where the extract air has high humidity, the latent heat is also sometimes partially recovered, and the condensed vapour needs to be run to drain. Normally, the plates are approximately square, with the two airstreams crossing, in what is commonly described as a crossflow arrangement. The physical arrangement of ductwork to all four sides of the square is usually difficult, so the square is frequently mounted diagonally in a box with an inlet and an outlet on two opposite sides.

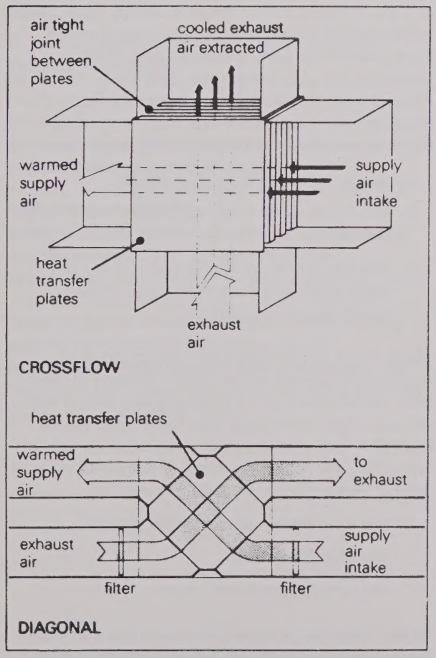

Figure 71 General physical arrangements of plate recuperators

14.25 Plate exchangers in partially contaminated airstreams need access for cleaning, usually have a higher air resistance than regenerators, and take up a longer duct length.

14.26 Glass-tube recuperators exist for very corrosive airstreams but their cost usually precludes their use in heating, ventilation and air-conditioning (HVAC) applications.

Heat pipes

14.27 Heat pipes use a volatile liquid on a wick inside a closed pipe to transfer heat from one end of the pipe to the other (see Figures 72 and 73). The pipes are usually finned tubes, of small diameter and arranged in banks. Very few heat pipes have been used in ventilation heat recovery because of their high capital cost, and little data has been gathered on their efficiency and reliability in use.

Run-around coils

14.28 The fourth method of airstream heat recovery, using run-around coils, does not require the two ducted airstreams to be brought to the same position (see Figure 74). A standard heat/cooler battery is put in each airstream, and pipework with a pump run between the two. The compromise between the physical size of heat recovery coil, increased air resistance, and heat recovery duty is usually much easier to achieve with run-around coils. The complex arrangement of coils can collect and/or distribute recovered heat from more than one supply/extract duct. The total heat recovery is usually lower than the other three types, because of the double heat transfer.

14.29 Pipe coils in airstreams are prone to freezing, and so the pipework is usually filled with a glycol solution. Circulating pumps need to be suitable for cold liquids (not canned rotor pumps) and the arrangement is usually more efficient with both coils arranged in contraflow. Where run-around coils are installed, temperature control should be considered to ensure that the differential between the incoming and exhaust air supplies justifies the operation of a circulating pump.

Conversion to variable air volume (VAV) operation

14.30 Several existing mechanical ventilation and cooling installations were designed as constant volume air supply and extract systems, with local temperature controls, some of these being capable of conversion to VAV operation. The energy evaluation involves three potential savings:

a. reduced load on heating and/or cooling central plant, owing to reduced demand at locally controlled areas;

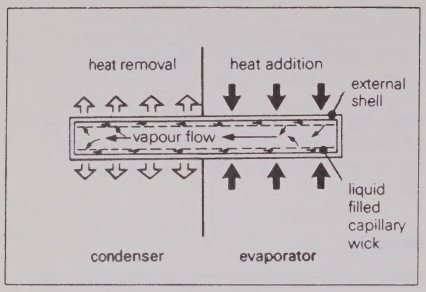

Figure 72 Principle of heat pipe operation

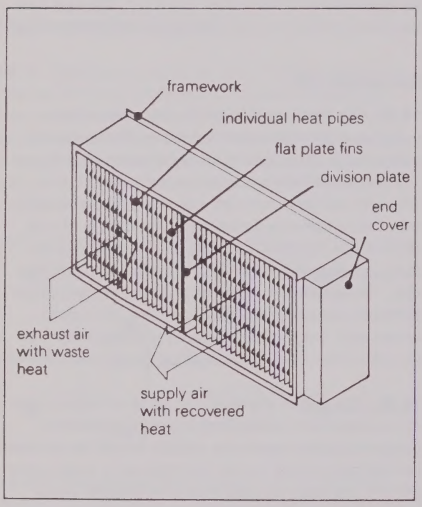

Figure 73 Heat pipe recovery unit with flat plate fins

b. reduced fan power necessary, owing to reduced volume of air;

c. reduced fan power, owing to reduced frictional losses in ductwork.

14.31 The following types of installation could be modified to VAV operation:

a. fresh-air ventilation/cooling to internal spaces;

b. terminal-reheat air systems;

c. dual-duct air systems.

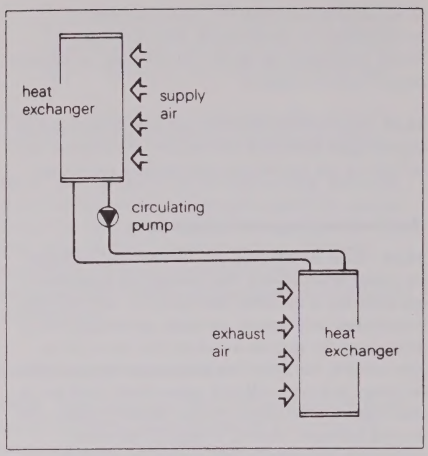

Figure 74 Principle of run-around coils

14.32 In these cases, the first consideration is the matter of the terminal devices to be used to modify the volume of air input according to local temperature. Any modification of this kind will almost certainly involve ceiling and air input grille/diffuser work. If dealing with a chilled air installation, the input diffuser will nearly always need to be changed to avoid the problem of cold air not mixing adequately when low volumes are required (dumping). Volume controllers are available in three general forms:

a. directly connected to an input diffuser;

b. directly connected to an input diffuser with through ductwork;

c. with connections for flexible ductwork to a few (three to five is most common) input diffusers, sometimes with a reheat coil.

14.33 These devices reduce the total volume of air required, with consequent reduction of heating or cooling load. The fan power saving is normally only realised with backward-curved centrifugal fans. The reduced volume required in itself produces some saving of power with this type of fan. The options to increase this saving (listed in order of increasing cost of installation) are:

a. add an automatic damper to inlet or outlet;

b. add inlet guide valves;

c. add variable-speed motor drives.

14.34 These are generally controlled to give a constant pressure measured in the fan delivery ductwork. Extract fan speeds can be controlled by linking control to the supply fan speed.

Support and reference material

Health Building Notes (HBNs)
Pathology services (HBN 15). HMSO, 1991. ISBN 0113214014.
Mortuary and post-mortem rooms (HBN 20). HMSO, 1991. ISBN 0113214006.

Health Technical Memoranda (HTMs)
Ventilation of healthcare premises (HTM 2025). This subsumes Engineering Data Sheet DV4.1, and was published by HMSO in 1994.
The control of legionellae in healthcare premises – a code of practice (HTM 2040):
Good practice guide. NHS Estates, HMSO, 1993. ISBN 0113216831;
Management policy. NHS Estates, HMSO, 1993. ISBN 0113216807;
Design considerations. NHS Estates, HMSO, 1993. ISBN 0113216893;
Operational management. NHS Estates, HMSO, 1993. ISBN 0113216823;
Validation and verification. NHS Estates, HMSO, 1993. ISBN 0113216815.

Engineering Data Sheets
DV4.1 Ventilation of operating departments, a design guide. DHSS, 1983.

Scottish Hospital Planning Notes (SHPN) – Scotland
SHPN 15, in preparation.

Health and Safety Executive, Health Services Advisory Committee
Safe working and the prevention of infection in the mortuary and post-mortem room. Health Services Advisory Committee, Health and Safety Executive (HSE), 1991. ISBN 0118854488.
Safety in health service laboratories: safe working and the prevention of infection in clinical laboratories. Health Services Advisory Committee, Health and Safety Executive (HSE), 1991. ISBN 0118854461.
Safety in health service laboratories: safe working and the prevention of infection in clinical laboratories: model rules for staff and visitors. Health Services Advisory Committee, Health and Safety Executive (HSE), 1991. ISBN 0118854429.

Contents

15.1 Introduction *page 79*

15.10 Heat pump performance *page 79*
- 15.10 Vapour-compression cycle
- 15.13 Coefficient of performance (COP)
- 15.15 Cycle temperature and COP
- 15.17 Actual COPs
- 15.20 Primary energy ratio (PER)

15.22 Heat sources *page 80*
- 15.23 Ambient air
- 15.26 Exhaust air
- 15.29 Surface water
- 15.31 Ground water
- 15.32 Sewage, waste and industrial water
- 15.33 Ground
- 15.34 Refrigerated spaces

15.35 Heat sinks *page 81*
- 15.36 Air
- 15.37 Radiators and convectors
- 15.39 Underfloor heating
- 15.40 Fan coils and induction units
- 15.41 Domestic hot water
- 15.42 Swimming pools

15.43 Machine options *page 82*
- 15.44 Reverse-cycle units
- 15.46 Self-contained and free-standing units
- 15.49 Split-system units

15.50 System options *page 83*
- 15.51 Bivalent alternative systems
- 15.53 Bivalent supplementary systems
- 15.55 Balanced systems

15.58 Operational variations *page 83*

15.60 Viability test *page 84*
- 15.63 Heat pump option
- 15.63 Conventional system

15.64 Load models and performance analysis *page 84*
- 15.64 Information required
- 15.69 Constant-load applications
- 15.72 Demand-based variations
- 15.74 Seasonable variations
- 15.79 Optional analysis
- 15.83 Revenue items
- 15.85 Capital items
- 15.87 Option appraisal

Support and reference material *page 86*

15.0 Heat pumps

Introduction

15.1 A heat pump is a plant which extracts heat from a low-temperature source and supplies it to a high-temperature heat sink. For this to take place, it is necessary to provide a work input to the plant.

15.2 A refrigeration plant consists of exactly the same components as a heat pump. The fundamental difference between a refrigerator and a heat pump is that the prime aim and design of a refrigerator is to provide cooling. A simple domestic refrigerator is designed to cool the contents of the unit and reject heat to the kitchen area. **The use of chlorofluorocarbons (CFCs) and hydrochlorofluorocarbons (HCFCs) as heat-transfer media is a matter of considerable environmental concern. This issue is dealt with in detail at the beginning of Section 19, Refrigeration.**

15.3 There are situations where heating and cooling are equally important. A sports complex with an ice rink that requires cooling and a swimming pool that requires heating is a classic example. In such cases the plant would be referred to as a heat pump.

15.4 Theoretical knowledge of heat pumps is as old as that of refrigerators. However, refrigerators are widespread, whilst heat pumps are comparatively rare. This is because there have always been, and often still are, other simple, reliable and more cost-effective means of providing heating.

15.5 It is only comparatively recently that increasing energy costs have made it worthwhile to consider the viability of using heat pumps. The Electricity Council has encouraged the development of heat pumps and there are currently some 50 suppliers offering them for space-heating applications.

15.6 There are relatively few heat pumps in the NHS but, with further development of the heat pump and its uses, they could become widespread.

15.7 This section briefly describes the various types of heat-pump systems, including possible heat sources and heat sinks. Guidance is given on the performance analysis and financial appraisal methodology related to heat-pump applications.

15.8 Any refrigerator system, including vapour absorption plant, can be used as a heat pump. Vapour absorption plant tends to require a high-grade heat input and would not be used as a heat pump unless refrigeration was also required. Most chiller and heat-pump units operate on the vapour compression principle and the current state-of-the-art design has concentrated on this cycle.

15.9 Vapour-compression systems only are described in this section, although the analysis methodology can be applied to any heat pump system.

Heat pump performance

Vapour-compression cycle

15.10 Figure 75 shows the main components of a vapour-compression plant.

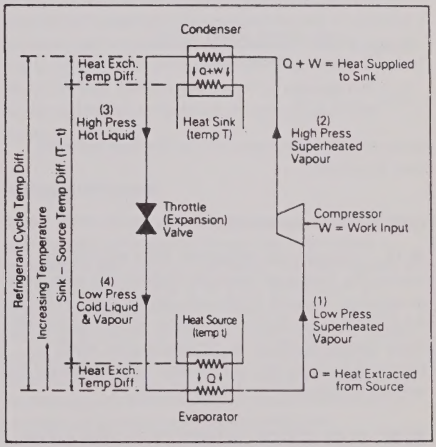

Figure 75 Vapour-compression plant

15.11 The refrigerant enters the compressor slightly superheated at a low temperature and pressure (1). It leaves the compressor superheated at a high temperature and pressure (2). In the condenser the vapour de-superheats, condenses and finally subcools as heat is supplied to the heat sink. Virtually all of the heat supplied is due to the latent heat of condensation. The proportions of the heat of condensation and heat supplied during de-superheating and subcooling are quite small. The important temperature is the condensing temperature, which must be sufficiently above the heat sink temperature to allow for heat exchange and an economically sized condenser unit.

15.12 The hot liquid leaving the condenser (3) is expanded, usually in a throttle valve, to the evaporator pressure. This expansion produces low-temperature liquid which, together with some flash vapour (4), enters the evaporator. Here evaporation takes place at a constant temperature, which must again be sufficiently below the source temperature (t) to allow for heat exchange and an economically sized evaporator unit.

Coefficient of performance (COP)

15.13 The most important performance criterion for any type of engineering plant is the ratio of the required output to the input which must be paid for. In most systems, this is less than 1 and is expressed as the plant efficiency.

15.14 In both refrigerators and heat pumps, the same ratio is used to compare different plants but the value is invariably greater than 1 and the term "efficiency" would be inappropriate. Instead, COP is used. This is normally expressed as COP_{hp} or COP_{ref} the suffixes referring to heat pump and refrigerator respectively:

$$COP_{hp} = \frac{\text{Rate of heat supply to sink}}{\text{power input}}$$

$$COP_{ref} = \frac{W + Q}{W}$$

where W = the work input and Q = the heat extracted from the source.

Cycle temperature and COP

15.15 For a particular refrigerant, the energy change through the condenser varies only slightly for a wide range of operating pressures or heat-sink temperatures. However, this is not the case for the compressor energy requirement. This is directly related to the refrigerant cycle, which is fixed by the condensing and evaporating temperatures and will vary considerably for different cycles.

15.16 As the difference between the heat-sink and the heat-source temperatures increases, the necessary difference between the condenser and evaporator temperatures will also increase. This raises the pressure ratio and compressor power to give a lower COP. Theoretical COP values of three to six are typical for most heat pumps.

Actual COPs

15.17 The rate of heat supply to the heat sink may be higher than that predicted by the theoretical analysis as a result of:

a. heat from an electric drive;

b. heat recovered from the exhaust of an engine drive.

15.18 The input power requirement of the plant may also increase as a result of:

a. the conversion efficiency of the compressor drive;

b. additional pumps or fans to circulate secondary fluids;

c. the system controls;

d. defrosting.

15.19 The net result is that the actual COP values are less than those theoretically predicted and are more likely to be in the range of 2 to 4. It is very important to determine the operating temperatures and exactly what inputs have been included when assessing manufacturers' quoted values of COP.

Primary energy ratio (PER)

15.20 COPs compare the rate of heat supplied to the heat sink with the power input. It is often useful to compare the rate of useful heat supplied with the rate at which primary energy is consumed. The primary energy ratio (PER) is defined as follows:

$$PER = \frac{\text{Rate of useful heat supplied}}{\text{Rate of primary energy consumed}}$$

15.21 For example, it is proposed to drive a heat pump having a COP of 3.2 by a gas engine, which has a thermal efficiency of 30% with a further 50% of heat recovery from the exhaust gases:

$$PER = (3.2 \times 0.3) + 0.5 = 1.46$$

This plant can now be compared to a conventional gas-fired boiler for which the PER is the same as the overall thermal efficiency:

$$PER = 0.8$$

Heat sources

15.22 The two main requirements for any potential heat-pump scheme are a readily available "free" low-grade heat source and a convenient heat sink. To maximise the COP and minimise both the size and cost of the evaporator, the heat source should have good heat-transfer properties with as high a temperature as possible. The following heat sources have all been used for heat-pump applications.

Ambient air

15.23 Ambient air is the most commonly available but least attractive heat source. As the ambient temperature falls, building heat losses increase and the heat-pump COP falls. When a heat pump is designed to satisfy a building design heat load for a sub-zero outside temperature prediction, it will be operating on a very substantially reduced capacity for most of the heating season.

15.24 When the ambient air temperature falls to around 6°C, there is the added complication of having to defrost the outside of the evaporator tubes regularly. In addition to the extra cost of plant and controls, this also increases the energy consumption by up to 8%.

15.25 The air side of heat exchangers generally utilises high-resistance finned tubes and a fan is required. This also increases the initial cost and the energy consumption.

15.25 Without some form of thermal storage, heat pumps consume high-cost, peak-rate electricity. Ambient air is unlikely to be viable as a heat source unless the only alternative is direct electric heating charged on a day unit tariff.

Exhaust air

15.26 Exhaust air or waste gases have a number of advantages compared with ambient air:

a. temperatures are normally higher, giving a higher COP;

b. temperatures are normally consistent, giving steady loads;

c. there is no need for defrosting;

d. exhausts often have a high moisture content which allows latent as well as sensible heat extraction.

15.27 Examples of hot gas exhausts include most ventilation-system extracts, service-duct extracts and boiler-flue gases. The condensation of certain flue gases can lead to acid corrosion problems. In these cases the heat pump should be designed to either tolerate or avoid sub-dewpoint operation.

15.28 A popular heat-pump application is the recovery of heat from the humid extract of swimming or hydrotherapy pools, to provide dry air and pool-water heating. It is always prudent to check the viability of a simple heat-recovery exchanger first.

Surface water

15.29 This includes surface drainage, the sea, rivers and lakes. They are all highly desirable sources of heat as their bulk temperature is likely to always be above 4°C. Water has excellent heat-transfer properties enabling shell and tube heat exchangers with plain tubes to be used as evaporators. Provided that the source is near to the main plant, pumping costs will be considerably lower than the equivalent fan running costs.

15.30 There may be some disadvantages, depending on the water quality. Filters may be required and, as a consequence of fouling, back-flushing and cleaning should be incorporated into the regular maintenance programme. The heat-pump intake may also require protection from damage by driftwood etc. Nevertheless, it is worth considering the application of a heat pump whenever a good source of surface water is available.

Ground water

15.31 The temperature of water direct from the ground via springs, boreholes etc is normally above 10°C, making it a better heat source than surface water, although attention should be paid to the mineral content of the water, which may lead to excessive scaling etc.

Sewage, waste and industrial water

15.32 The temperature and quality of waste water can vary considerably and handling or contamination problems must be considered. In theory, any warm-water heat source is worthy of investigation.

Ground

15.33 A number of installations outside the NHS have been built with the evaporator coils embedded in the ground. Soil properties vary considerably and it is difficult to predict performance. A substantial land area is required and the system uses an intermediate fluid, usually brine or glycol solution. Further development is required before it will be worthwhile considering the ground as a heat source.

Refrigerated spaces

15.34 With refrigeration systems there is a need to deal with the heat generated by the process cycle. When a refrigeration load only is to be served, the heat rejected at the condenser should be at as low a temperature as possible to maximise the COP. However, if the rejected heat is to be utilised to satisfy a heating load, it is usually necessary to increase the heat-rejection temperature. This reduces the machine COP, but the overall economics can be extremely attractive as both a heating load and a cooling load are being served by a single unit.

Heat sinks

15.35 To maximise the COP and minimise the size and cost of the condenser heat exchanger, the temperature of the heat sink should be as low as possible. Most air distribution and water-based heating systems are potential heat sinks.

Air

15.36 Typical air-based applications include air passed over individual in-room units to mixtures of recirculated and fresh air in more complex ventilation systems. In such applications there is no need to heat the air above 40°C, which is within the normal temperature range of ambient

air condensers used on standard refrigeration plants. Consequently, existing refrigeration technology applies.

Radiators and convectors

15.37 Low-pressure hot water (LPHW) for radiators and convectors is normally heated to around 82°C. If a heat pump is required to supply heat at this temperature, the plant COP is likely to be low. Refrigeration compressors do not usually run at such high temperatures, and it is only recently that some manufacturers have been able to offer machines for this duty.

15.38 An alternative approach is to increase the size of the heat emitters and reduce the LPHW supply temperature. This facility would have to be "designed in" and would reduce the overall scheme viability by increasing the pipework and pumping costs and reducing flexibility for replacement at the end of heat-pump life.

Underfloor heating

15.39 Water-based underfloor heating systems are normally limited to temperatures below 30°C. This is an ideal heat-sink temperature and, based on proven technology, should give a high COP.

Fan coils and induction units

15.40 The water-temperature requirements for fan coils and induction units are similar to those for radiators. However, there is an additional disadvantage in using a reduced water temperature to increase the COP. This increases the size of the unit, its cost and the fan power requirement.

Domestic hot water

15.41 Domestic hot water services (DHWS) temperature requirements are around 60°C, which is more suitable than LPHW as a heat sink. Using a heat pump as a preheater from 10°C to around 40°C would be even more attractive. **This may be acceptable for certain continuous-flow systems but not for the more usual storage-based systems, owing to potential legionella problems** (see Health Technical Memorandum (HTM) 2040 – 'The control of legionellae in healthcare premises – a code of practice').

Swimming pools

15.42 The normal temperature for swimming-pool water is around 30°C to 40°C for hydrotherapy pools. This represents an ideal heat sink for a heat pump. Swimming pools are popular heat-pump applications providing both dehumidified recirculated air and pool water heating.

Machine options

15.43 The evaporator (heat source) and condenser (heat sink) are basically heat exchangers designed for the heat transfer rate, and fluids (air, water, refrigerant) related to each particular application. Beyond this, heat-pump machines can be classified according to the pipework configuration and component assemblies.

Reverse-cycle units

15.44 By installing the necessary additional valves it is possible to reverse the refrigerant circuit. This reverses the machine cycle such that the heat sink becomes the source and vice versa. A machine with this facility is called a reverse-cycle unit (see Figure 76).

15.45 Reverse-cycle units are used in applications where the fluid reservoir temperatures vary over a wide range. For example, the temperature of fresh ambient air entering a ventilation system varies seasonally so that it requires heating during the winter and cooling in summer.

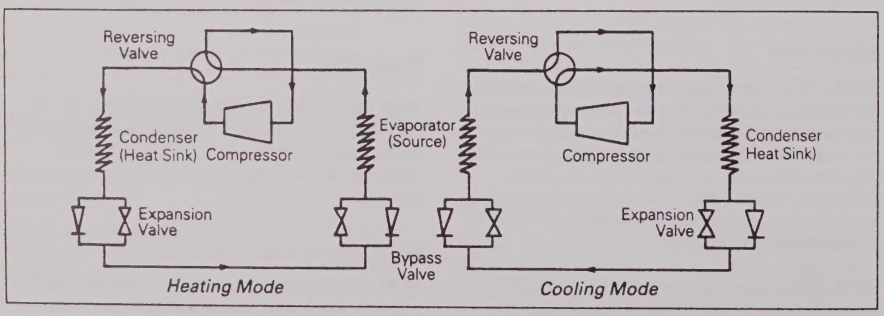

Figure 76 Reverse-cycle unit

Self-contained and free-standing units

15.46 It is rare for the heat source and heat sink to be at the same location and there is often a need to transport heat energy between the two heat reservoirs. The method employed depends on the type of machine.

15.47 Self-contained heat-pump units have all the major circuit components in a single enclosure. With this type of machine, the heat energy is transported to and/or from the unit by re-routing the relevant heat-sink/source fluids, or via an intermediate fluid circuit, usually water-based.

15.48 Another method is to locate one heat-pump heat exchanger (sink or source) at the external heat reservoir, with all of the remaining circuit components in a single enclosure, and at the other point of use – a heat reservoir. Heat is then transported between the heat sink and source via the heat-pump circuit refrigerant pipework. This type of machine, with all circuit components except for one heat exchanger in a single enclosure, is called a free-standing unit.

Split-system units

15.49 In a free-standing unit it may be inconvenient, for noise or access reasons, to install the refrigerant compressor at the point of use. A further machine variant for this application is to locate the compressor and the external heat exchanger in one enclosure, with the remaining circuit components in a second enclosure at the point of use. The enclosures, one at the heat source and one at the heat sink, are again joined via the refrigerant pipework. This arrangement is termed a split system. It is important to ensure that the horizontal and, in particular, vertical separation between components is not too great, to allow satisfactory refrigerant circulation.

System options

15.50 In applications where both the heat sink and heat source have constant temperatures and heat capacities, the required heat-pump duty is fixed. Where the reservoir temperatures vary, the heat capacities and the potential COP also vary. This complicates the heat-pump sizing procedure and often leads to a large machine with a very low load factor. A simple comparison between a heat pump and an alternative plant for particular use can be misleading. Frequently, a better solution is to use a heat pump with some other form of heater in a bivalent system (see below).

Bivalent alternative systems

15.51 With this system, the total heat load is served by either the heat pump or an alternative heater. If, for example, ambient air is the heat-pump source, the COP would fall with air temperature. With a bivalent system, the heat pump could be switched off and a convenient boiler switched on when the air temperature fell to a preset value. The benefits of this system are that the heat pump always operates with a high COP, evaporator defrosting can be avoided and the alternative boiler always operates with a high load.

15.52 As energy costs increase relative to capital costs, this type of system becomes more attractive.

Bivalent supplementary systems

15.53 With this system, the heat pump runs continuously, together with some other item of plant. This type of system is used where the heat-source heat capacity is less than the heat-sink "point-of-use" demand, so that additional heating is required. All air or water preheat applications are bivalent supplementary systems.

15.54 The benefits of this system are that the heat-pump cost is low and its utilisation high compared with the bivalent alternative system. Also, the supplementary heater can be sized to provide a full standby facility in the event of a heat-pump failure.

Balanced systems

15.55 A multiple heat-pump arrangement can be effectively used in buildings with simultaneous space-heating and space-cooling loads. Reverse-cycle self-contained units are located in each space or zone to be served. All of the units are connected to a continuously pumped water-based ring main at approximately 25°C. This circuit also includes a boiler for heating, as well as additional cooling facilities.

15.56 Each individual heat pump operates in either a heating or cooling mode, as required by the local space conditions, and uses the circulating water as a heat sink for cooling and as a heat source for heating. When the heat load equals the cooling load the system is in balance and no additional heating or cooling is required. If the heating load increases, the water temperature falls and the boiler is operated to maintain the water temperature. Conversely, if the cooling load increases the water temperature increases and the cooling tower is operated.

15.57 This system is plant-intensive and should be considered only for applications with a substantial cooling load for most of the year and/or multiple areas or zones requiring finely controlled space temperatures.

Operational variations

15.58 For heat-pump systems based on constant heat sources and heat sinks, provided both are available, the machine can operate under a simple automatic control. Depending on the priority of the load being served, a

standby heat pump or alternative system may have to be considered. If the machine load is seasonal, the maintenance programme will have to take the machine availability into account. For loads with varying temperatures, heat capacities, COPs and availabilities the operational implications are more complex.

15.58 Ideally, the heat pump should always be used when the temperature levels give a high COP. However, the loads being served may be intermittent and this introduces a time control element. The availability and efficiency of any associated alternative or supplementary plant could introduce a seasonal usable effect. For reverse-cycle machines with summer and winter loads, the maintenance requirements can also affect the overall operational availability.

15.59 Consequently, for any heat-pump application, the operational policy, in terms of the intended periods of machine operation, overriding control factors and maintenance requirements, should be established and agreed at an early stage. Any subsequent performance analysis and revenue-saving assessment should be consistent with this operational policy.

Viability test

15.60 The detailed performance analysis, revenue assessment, budget costing and financial appraisal of a potential heat-pump scheme involves a substantial workload. Prior to any comprehensive study, it is advisable to undertake a simple viability test to establish whether a scheme option is likely to fail.

15.61 With the possible exception of a refrigerated-space application, the capital cost of any heat-pump scheme is almost certain to be higher than that of a conventional system to serve the same loads.

15.62 To justify the additional capital costs, the overall annual revenue cost of the heat-pump option must be lower than that of a conventional system. The hourly energy cost with the heat pump operating must be significantly lower than the hourly energy cost of the conventional alternative.

15.63 For example, a heat pump with a COP of 2.3 is proposed to extract heat from a borehole water supply and serve a domestic hot-water load. Electricity costs 4.0p/kWh, gas costs 35p/Therm (1.2p/kWh) and a direct gas-fired water heater's overall efficiency is 70%:

Heat pump option

$$\text{Cost/useful kWh} = \frac{4.0}{2.3} = 1.74\text{p/kWh};$$

Conventional system

$$\text{Cost/useful kWh} = \frac{1.2}{0.7} = 1.72\text{p/kWh}.$$

Cost per useful output is similar for both systems and there is no advantage associated with the more expensive heat-pump option.

Load models and performance analysis

Information required

15.64 Before any detailed performance analysis can be undertaken, a thorough understanding of the nature of the heat reservoirs and the heat-pump characteristics is essential. This information should be supported by quantitative data which includes allowances for the intended operational policy.

15.65 The heat sink usually refers to the heat load to be served and the required data include:

- the rate of heat transfer in kW and any variation with time (a heat-load profile);
- the corresponding temperatures at which the heat must be supplied.

15.66 The heat source usually refers to the fluid from which the "free" heat is to be extracted. The data required is similar to those for the heat sink and includes:

- the source heat capacity in kW and any variation with time (a heat-availability profile);
- the corresponding temperatures at which the heat is available.

15.67 A full operating characteristic is required for the heat pump, showing COP variations over the temperature ranges of the heat source and heat sink or the intended operating range for bivalent systems.

15.68 The heat supplied to the sink for all heat-pump applications includes both the heat extracted from the source and some of the input work absorbed by the compressor. The heat extracted from the source is always less than that supplied to the sink.

Constant-load applications

15.69 With a constant heat-sink/source arrangement, the size of the installation is dictated by whichever is the lesser of the heat-sink capacity (the heat load) and the heat-source capacity plus the input power (the heat availability). Having sized a suitable unit, the input power, output power, cycle temperatures and machine COP are all fixed. The overall quantities of heat transferred and the primary energy input can be determined by multiplying the normal operating values by the period of operation.

15.70 If both the heat sink and heat source have constant values, but occur only on an intermittent basis, the heat pump can only operate when both occur simultaneously and the period of operation must be reduced accordingly.

15.71 This type of system is common for applications where one heat reservoir is large compared with the other and the resulting unit is relatively small, but able to operate at a constant rate. An example would be the extraction of heat from a borehole water supply to preheat the make-up water for a steam boiler plant.

Demand-based variation

15.72 Sink and source heat and temperature profiles should be constructed where the heat sink or source capacities vary with the usage of the associated system providing heat or being served. Typical applications would include a DHWS heat sink or a laundry waste-water heat source. In such cases 24-hour profiles showing average hourly load and temperature levels should be satisfactory.

15.73 The performance of the heat pump can be established for each value of hourly load, from its operational characteristic. The overall energy values can be determined from the sum of the hourly load level values multiplied by their respective frequencies of occurrence over the profile period.

Seasonal variations

15.74 The majority of heat-pump installations to date have used ambient air as the heat sink and/or heat source and it is necessary to evaluate the energy performance over a full year or heating season. This type of analysis is more complex than the previous methods described and statistical data is generally used as the basis for temperature variations.

15.75 The Electricity Council has developed a method for assessing the performance of a heat pump serving a space-heating load over an average season. This procedure is described in the Chartered Institution of Building Services Engineers (CIBSE) TM11, 'Selection and application of heat pumps'. A heating analysis chart is prepared which can be applied to bivalent systems.

15.76 Statistical data giving the frequency of occurrence for bands of dry-bulb temperature, wet-bulb temperature and enthalpy can be used as another method of assessment.

15.77 By establishing the heat-pump performance at each temperature band and multiplying each value by the frequency of occurrence, the total annual values can be summed. This method has an advantage in that it can be applied to both heating and cooling applications.

15.78 Both the above methods are mathematically simple but lengthy and lend themselves to computer-based analysis.

Option analysis

15.79 There are two tests to assess the viability of a potential heat-pump application:

a. the comparison of the heat-pump proposal with the conventional system, including heat recovery where applicable;

b. the comparison of the heat-pump proposal with other heat-pump options.

15.80 The most common heat-pump application is in a bivalent system where a conventional plant already exists. In these applications the total capital costs associated with the heat pump alone can be compared directly with the overall revenue savings. In bivalent supplementary or total heat-pump schemes, a number of heat-pump options may have to be compared.

15.81 For a particular heat-pump application, the various machine options can include the unit size (that is, the proportion of the heating load served), the load versus COP characteristic and the intended operational policy (that is, continuous or with temperature or other control to prevent low-COP operation).

15.82 In such cases each option should be compared to the conventional alternative "base-option" system.

Revenue items

15.83 The performance analysis described above provides annual data for the heat extracted, the power input which has to be paid for and the heat supplied, thus quantifying the energy implications for each option.

15.84 Maintenance requirements for refrigeration circuits are relatively complex and one or more specialist service visits are required each year. Beyond these specialist visits, planned preventive maintenance for regular heat-exchanger cleaning and system performance checks may have to be incorporated into the schedules. The CIBSE TM11 referenced above provides further information on the maintenance requirements.

Capital items

15.85 Refrigeration plant has been used in air-conditioning systems for many years and many applications, such as computer rooms, have an all-year-round cooling load. The design and reliability of such plant has progressively improved.

15.86 Plant utilisation for a heat-pump system is comparable to that of a year-round chiller plant and a

design life of 15 years should be used for option appraisal. However, if the heat sink or source media are aggressive, or if excessive defrost cycles are expected, the design life may be reduced.

Option appraisal

15.87 A suitable financial appraisal procedure is described in Section 26. This procedure involves the completion of a financial assessment sheet for each option, which can be used in conjunction with the "base-option" data to determine a simple payback period and Benefit Cost Ratio (BCR).

15.88 The most suitable options are those with both a high BCR and a short simple payback period.

Support and reference material

Health Technical Memoranda (HTMs)
The control of legionellae in healthcare premises – a code of practice (HTM 2040):
Good practice guide. NHS Estates, HMSO, 1993. ISBN 0113216831;
Management policy. NHS Estates, HMSO, 1993. ISBN 0113216807;
Design considerations. NHS Estates, HMSO, 1993. ISBN 0113216893;
Operational management. NHS Estates, HMSO, 1993. ISBN 0113216823;
Validation and verification. NHS Estates, HMSO, 1993. ISBN 0113216815.

CIBSE technical memoranda
TM11 Selection and application of heat pumps. Chartered Institution of Building Services Engineers (CIBSE), 1985.

Textbooks
Heap, R D. **Heat pumps**. Second revised edition. E & F Spon, 1983. ISBN 0419126007.
Leyland, T J. **An introduction to the heat pump**. Midlands Electricity Board.
Reay, David Anthony and MacMichael, D B A. **Heat pumps**. Pergamon Books, 1987. ISBN 0080334636.

The Heat Pump and Air-Conditioning Bureau
The Heat Pump and Air-Conditioning Bureau
30 Millbank
London
SW1P 4RD

16.0 Combined heat and power (CHP)

16.1 Detailed guidance and advice on the use of CHP plant in the NHS is given in 'A strategic guide to combined heat and power', NHS Estates, 1993 and Good Practice Guide No 60 – 'The application of combined heat and power in the UK health service', Energy Efficiency Office, 1992.

16.2 CHP or co-generation plant basically consists of an engine or prime mover driving an electrical generator. Waste heat from the drive units is used to provide useful space or process heat while electrical power is being simultaneously generated.

16.3 The Electricity Council Engineering Recommendations G47/1 and G59 allow for CHP units to be operated in parallel with the mains low-voltage supply. The Energy Act 1983 requires electricity companies to publish purchase tariff arrangements so that CHP users can export any surplus power generated back into the public distribution system.

16.4 The combined effect of the above measures enables CHP users either to generate their constant base-load electrical requirements and purchase the remainder from the supply authority or to generate a higher electrical output and sell any surplus power back to the supply authority.

16.5 CHP plant selection is no longer restricted to the on-site heat-to-power demand ratio and it is now possible to install plant that has a high utilisation factor or operates for more limited peak lopping during periods when the electricity supply tariff is punitively high. However, the ultimate revenue savings for a CHP scheme depend on local tariff charges and unit fuel costs as well as machine installation and maintenance costs. Therefore the feasibility of CHP schemes should be assessed on an individual basis.

16.6 Where consideration is given to the use of standby generator (SBG) sets for CHP, Health Technical Memorandum (HTM) 2011 – 'Emergency electrical services', should be consulted.

16.7 Consideration of the application of CHP in NHS premises is strongly recommended.

Support and reference material

Strategic Guides
A strategic guide to combined heat and power.
NHS Estates, 1993.

Energy Efficiency Office
Energy Efficiency Office Good Practice Guide No 60 **The application of CHP in the health service**. 1992.

Energy Technology Support Unit (ETSU)
Energy Technology Series Booklet No 4 (ETSU 4)
Installation and use of small scale packaged CHP systems.
Guidance notes for small scale packaged CHP (draft).
ETSU.
Energy Technology Support Unit (ETSU)
Building 156
Harwell Laboratories
Didcot
Oxon
OX11 0RA
Telephone 0235 436747

Combined Heat and Power Association
CHPA Yearbook. Produced annually by the Combined Heat and Power Association.
Combined Heat and Power Association
35–37 Grosvenor Gardens
London
SW1W 0BS
Telephone 071 828 4077

17.0 Water

17.1 Guidance and advice on efficiency in the use of water and sewerage services is given in 'A strategic guide to water and sewerage policy', NHS Estates, 1993 (the Northern Ireland Estates Services Directorate will publish a guide for Northern Ireland during 1994).

17.2 Water is grouped with electricity and fossil fuels (collectively termed energy/utility services).

17.3 Currently, water can account for from 10% to over 20% (and more usually 12% to 15%) of the total site energy/utility costs, depending on the size and type of hospital and the type of heating medium. It is anticipated that costs will rise sharply.

17.4 There is considerable scope for water conservation measures, particularly on existing sites and these measures are likely to have a major influence on the order of energy/utility revenue savings in the near future.

17.5 Traditionally, water consumption has been monitored on a crude m^3 or per bed basis. The resulting figures can vary by a factor of ten overall and a factor of four for similar types and sizes of hospital. Fundamental differences, such as central steam plant with low condensate return, can add 100% to the water consumption of a site, when compared to an equivalent decentralised low-pressure hot-water (LPHW) site. Similarly, underground leaks can add enormously to the base consumption.

17.6 With such large variations it is necessary to investigate which factors apply to each individual site in order to determine an acceptable order of water consumption and identify possible saving measures.

17.7 A number of hospital sites extract water from boreholes. The viability of using a borehole in terms of capital costs, treatment costs, maintenance and revenue savings should be determined by a specific feasibility study for each potential site.

17.8 It should be borne in mind that sewerage costs are related to overall water consumption and, therefore, saving and conservation measures are doubly important.

17.9 Advice on minimising the risks associated with legionellae in water services systems is contained in Health Technical Memorandum (HTM) 2040 – 'The control of legionellae in healthcare premises – a code of practice'.

Support and reference material

Strategic Guides

A strategic guide to water and sewerage policy. NHS Estates, 1993.

Health Technical Memoranda (HTMS)

Cold water supply storage and mains distribution (HTM 27). DHSS, 1978. ISBN 0113206828. (Under revision.)

The control of legionellae in healthcare premises – a code of practice (HTM 2040):

- **Good practice guide**. NHS Estates, HMSO, 1993. ISBN 0113216831;
- **Management policy**. NHS Estates, HMSO, 1993. ISBN 0113216807;
- **Design considerations**. NHS Estates, HMSO, 1993. ISBN 0113216893;
- **Operational management**. NHS Estates, HMSO, 1993. ISBN 0113216823;
- **Validation and verification**. NHS Estates, HMSO, 1993. ISBN 0113216815.

Audit Commission for Local Authorities and the National Health Service in England and Wales

Untapped savings: water services in the NHS. NHS Occasional Paper No 5. HMSO, 1993. ISBN 011886078X.

Untapped savings or money down the drain? Audit guide. 1992/3.

Hospital Technical Notes (SHTN) – Scotland

Domestic hot and cold water systems for Scottish health care premises (SHTN 2). Scottish Office, NHS in Scotland Management Executive, in preparation.

Contents

18.1 Introduction *page 93*

18.4 Summertime alternative *page 93*

18.5 Distribution losses *page 93*

18.8 Reduction of storage to the economic minimum *page 93*

18.9 Separate DHWS boilers *page 93*

18.11 Local water heaters *page 93*

18.13 Required hot-water temperatures *page 94*

18.14 Alternative sources of hot water *page 94*

18.15 Summary *page 94*

Support and reference material *page 94*

18.0 Domestic hot-water services (DHWS)

Introduction

18.1 DHWS can represent more than 20% of the total delivered energy requirements of a modern hospital. This section deals briefly with energy-conservation measures associated with DHWS. It supplements comments in earlier sections on Good housekeeping (10.0), Building Services (11.0) and Water (17.0).

18.2 One of the primary controls recommended for legionellae in water services systems is the maintenance of appropriate water temperatures. Full guidance on this matter is given in Health Technical Memorandum (HTM) 2040 – 'The control of legionellae in healthcare premises – a code of practice'. It is essential that these measures are not compromised in an effort to achieve energy savings.

18.3 The heat load for the DHWS in hospitals occurs throughout the year. It is generally served by either low-pressure hot water (LPHW) or steam-heated hot-water storage calorifiers. There are two basic exceptions, remote buildings (either temporary or permanent) where direct electric water heating can be justified and summertime alternative (see below).

Summertime alternative

18.4 It can be viable to use immersion-type electric heaters in the summertime as an alternative to a steam supply or LPHW boiler installation serving a combined space-heating and hot-water load.

Distribution losses

18.5 Experimental work at a number of hospital sites has shown that distribution losses are extremely high and, in most cases, far greater than the useful heat drawn off. Distribution losses are usually about 50% of the heating cost but can be as high as 90% in some systems.

18.6 Energy losses arise because:

a. distribution systems tend to be unnecessarily long;

b. pipework is poorly lagged;

c. storage is often over-sized.

18.7 Many DHWS have a large potential for improvement in energy efficiency. The demand for hot water tends to be cyclical with peaks in the mid-morning, mid-afternoon and early evening. Overnight demand is usually low. Demand will depend on a number of factors such as supply temperature, storage volume, length of pipe runs and control.

Reduction of storage to the economic minimum

18.8 Patterns of demand should be established for each hospital site. The volume of storage required can then be calculated, including an allowance for the storage latent in the distribution pipework. Where the storage already provided is excessive, option appraisal calculations can determine the economic viability of changing the size of the storage vessel.

Separate DHWS boilers

18.9 At many sites, domestic hot water (DHW) is supplied from a boilerhouse with combined heating and DHWS boilers. Such systems are highly inefficient as they require the operation of a relatively large boiler during the summer months to meet a relatively small DHWS load. The provision of an entirely separate DHWS boiler obviates this problem.

18.10 In this case, the DHWS system can be operated in isolation. It may also be possible to reduce the extent of the distribution system and thus the standing losses. Independent DHW boilers can be obtained with quite high combustion efficiencies (up to 80%) and installation can give very short payback periods.

Local water heaters

18.11 Where the DHW requirement is particularly low, the energy loss associated with storage and distribution may be considerably greater than that required to heat the water. In this case, it may be viable to replace the DHW storage system with local point-of-use instantaneous water heaters. These heaters heat the water only as it is used and do not incur the energy losses associated with distribution and storage.

18.12 When carrying out an option appraisal on the installation of local water-heating arrangements, the primary fuel cost and not the level of consumption should be considered. As electricity is the most costly and

environmentally-damaging fuel, gas-fired heating systems should also be considered.

Required hot-water temperatures

18.13 Guidance on DHW temperatures is given in HTM 2040 (see 18.2 above) and the Health Guidance Note, '"Safe" hot water and surface temperatures'.

Alternative sources of hot water

18.14 Some alternative sources of hot water supply are briefly discussed below:

- solar heating for hot-water supply in hospitals is currently not cost-effective. Some few experimental installations have been made in the NHS but have met with little success (see also Section 25);
- almost all the heat taken by the hot-water system leaves through the waste-water drainage system. It is technically possible to reclaim this heat, but it is not generally cost-effective to do so;
- the hot-water demand may be served by a waste-heat boiler. This would clearly depend on the load patterns for hot water and the incinerator operating cycle (see Section 13);
- at North Tees District General Hospital, heat recovery from the incinerator (operational since March 1981) has shown a payback on extra capital expenditure of under two years. At University College Hospital, London, heat recovered from the incinerator serves as primary supply to an Angelery heat exchanger, which in turn provides heat to the DHWS system. The operation of the incinerator (during normal working hours) is coincident with the period of high DHW draw-off. **Such systems must comply with the full requirements of the Environmental Protection Act 1990, etc.** See 'A strategic guide to clinical waste management', NHS Estates, 1994.

Summary

18.15 The essential points covered in this section are:

a. energy-saving measures must not compromise precautions against colonisation and multiplication of legionellae;

b. centralised DHWS systems on extensive sites entail proportionately high distribution losses. Decentralisation, with the facility for shutting down daytime-only-occupied zones or buildings, has energy advantages;

c. long runs to isolated draw-off points with low draw-off rates should be avoided. Local water heaters should be provided in these locations;

d. in individual buildings or small hospitals served by LPHW boiler plant, a separate small boiler plant should provide the DHWS requirement;

e. the entire DHWS circulating system should be insulated to current economic standards. Pipework should be run as far as possible within the building shell, avoiding roof spaces and external above-ground situations as far as is practicable.

Support and reference material

Health Technical Memoranda (HTMS)
The control of legionellae in healthcare premises – a code of practice (HTM 2040):
Good practice guide. NHS Estates, HMSO, 1993. ISBN 0113216831;
Management policy. NHS Estates, HMSO, 1993. ISBN 0113216807;
Design considerations. NHS Estates, HMSO, 1993. ISBN 0113216893;
Operational management. NHS Estates, HMSO, 1993. ISBN 0113216823;
Validation and verification. NHS Estates, HMSO. 1993. ISBN 0113216815.

Health Guidance Notes
Health Guidance Note **"Safe" hot water and surface temperatures**. NHS Estates, HMSO, 1992. ISBN 011321404918.

Strategic Guides
A strategic guide to clinical waste management. NHS Estates, 1994.

Hospital Technical Notes (SHTN) – Scotland
Domestic hot and cold water systems for Scottish health care premises (SHTN 2). Scottish Office, NHS in Scotland Management Executive, in preparation.

Contents

19.1 Introduction *page 97*

19.2 Safety and the environment *page 97*
- 19.2 Greenhouse gases
- 19.3 CFCs

19.13 System overview *page 98*
- 19.19 Basic refrigeration processes (cycles)
- 19.22 Refrigerants and cycle efficiency
  - 19.22 Refrigerants
  - 19.29 Cycle efficiency

19.32 Cooling applications *page 99*
- 19.33 Air-conditioning
- 19.36 Computer installations
- 19.42 Catering departments
- 19.47 Miscellaneous loads

19.49 Refrigeration plant *page 100*
- 19.53 Individual air-cooled direct-expansion plants
- 19.56 Chilled-water plants

19.59 Plant performance analysis *page 101*
- 19.63 Cooling loads
- 19.65 Energy consumption and overall COP
  - 19.66 Fixed-capacity direct-expansion units
  - 19.69 Modulating direct-expansion units
  - 19.70 Multiple-chiller plants
  - 19.72 Overall performance

19.73 Option appraisal *page 102*
- 19.76 Revenue items
- 19.78 Capital items
- 19.79 Financial appraisal

19.80 Energy-efficient refrigeration plant *page 103*

19.81 Summary *page 103*

Support and reference material *page 103*

19.0 Refrigeration

Introduction

19.1 This section deals with the technological aspects of refrigeration services. Given the heightened concern about the environmental impact of commonly used refrigerants, the section commences with a discussion of this aspect.

Safety and the environment

Greenhouse gases

19.2 Greenhouse-gas emissions are those which remain in the atmosphere and trap the sun's energy. The main greenhouse gases are carbon dioxide (CO_2) and methane (CH_4). Other substances also damage the ozone (O_3) layer, which provides an essential measure of protection from solar radiation, and considerably exacerbate the problem. The most damaging group of these are those containing chlorine (Cl), particularly chlorofluorocarbons (CFCs). This damaging factor, the ozone depletion potential (ODP), is measured on a scale of zero to one, with one being worst.

CFCs

19.3 Refrigerants used up to the 1960s were mostly toxic. These included methyl chloride (CH_3Cl), sulphur dioxide (SO_2) and ammonia (NH_3/R717). The first CFC, dichlorodifluoromethane (CCl_2F_2/R12), was developed in the 1930s and became common during the 1950s. Its introduction replaced methyl chloride and sulphur dioxide as it was non-toxic and considered a "safe" refrigerant. Subsequently, more CFCs and hydrochlorofluorocarbons (HCFCs) were introduced in order to provide a wide range of refrigerants for different operating conditions. Of the toxic refrigerants, only ammonia remains in common use today, generally for large industrial-process and commercial cold-storage applications and in absorption chillers.

19.4 It did not become widely appreciated until the 1980s that CFCs discharged to the atmosphere were damaging the ozone layer. Most of the problem arose from the use of CFC11 as an aerosol propellant but, increasingly, after the welcome and very rapid response of the spray-can industry, the problem has become focused on refrigerants. It was estimated in 1991 that 75% of their emissions are due to leakage from existing plants. Within the UK, 35% of the use of CFCs is for refrigeration.

19.5 The Montreal Protocol meetings have directed that ozone-depleting substances should be phased out of use by the end of the century. In practical terms, the phasing out of the manufacture of CFCs is likely to make it uneconomic after 1995 to operate CFC systems which use large amounts of replacement refrigerant. HCFCs are much less damaging to the environment but will also be eliminated, probably by the year 2010. CFC11 and CFC12 have the highest ODP (1) and should be phased out of use as quickly as possible. In comparison, HCFC22 has an ODP factor of 0.05.

19.6 The key recommendations, so far as the NHS is concerned, are set out in the following action plan:

a. carry out a full audit of existing refrigerant usage;

b. identify CFC and HCFC procurement quantities;

c. monitor leakage of plants;

d. assess appropriate technical options. The guidance in this section should help in this;

e. implement leakage prevention programmes;

f. implement recycling and reclamation programmes, if appropriate;

g. give priority to equipment upgrade and replacement programmes;

h. phase out CFC procurement completely.

19.7 In the NHS, the problems do not appear particularly acute as it is probable that larger plants, if any, will be serving air-conditioning systems and using the less damaging HCFC22, which has, as yet, no satisfactory replacement. It is expected that, within the projected timescales, such plants will be replaced at the end of their useful life with non-CFC/HCFC plants rather than retrofitted with a non-CFC/HCFC refrigerant.

19.8 Most other systems will be small domestic-type systems using CFC12 and hermetically sealed. They are not recurrent users of refrigerant and are replaced when they fail. Small catering units may be of the semi-hermetic type and their condition, especially refrigerant-leakage rates, will determine when they should be replaced with a non-CFC unit or upgraded to use R134a (the non-CFC replacement for R12).

19.9 It is vitally important, when executing the audit, to ensure that there are no large plants using CFC11 or R502 (an azeotrope of HCFC22 and CFC115). These materials can entail very expensive replacement procedures. R502 is principally used by supermarkets and in transport applications and is not likely to be found in the hospital environment. CFC11 is common in large centrifugal air-conditioning applications and such plant may have been

used for air-conditioning processes in some deep-plan hospitals.

19.10 In all cases, if the audit shows a significant application using a CFC or HCFC substance, expert professional advice should be sought. Curing existing leaks is an obvious first step, but if a plant contains large quantities of CFC, plant failure will render such plant unrepairable, so contingency plans should be put in place, bearing in mind replacement or retrofit timescales.

19.11 As a general guide, the following technical actions can be considered where appropriate:

a. using HCFC22 (R22) equipment where possible as a short or medium term solution. The continued use of small CFC12 systems **that do not leak** is also acceptable;

b. retrofitting CFC12 (R12) systems with HFC134a, but the need to undertake the complicated process of changing the compressor oil should be borne in mind. A change of motor will also be required in hermetic or semi-hermetic machines, because of the unsuitability of the electrical insulation;

c. using HCFC22-based blends as a replacement for CFC502 low-temperature refrigeration applications;

d. other solutions using ammonia or propane, or systems utilising absorption refrigeration.

19.12 This review has pointed up the main areas for concern and gives procedural advice. The variety and application of CFCs within the refrigeration industry alone is so widespread that not all eventualities can be covered. The Chartered Institution of Building Services Engineers (CIBSE) Guidance note 'Chlorofluorocarbons, professional and practical guidance', 1989, also gives useful guidance. See also NHS Model Engineering Specificaton, Part C, Section 10 – 'Refrigeration' and the CIBSE 'Commissioning Code R – Refrigeration systems', 1991.

System overview

19.13 There are three categories of environmental conditions that require cooling in hospital buildings. They are:

a. humidity control in air-conditioning plants serving operating theatres, certain computer rooms etc;

b. sensible heat cooling in rooms containing heat-emitting equipment or with low-heat-loss characteristics, for example, deep-plan buildings, scanner rooms, computer rooms etc;

c. areas which require low internal temperatures, for example, certain cook-chill areas, mortuaries etc.

19.14 There is a need for special refrigeration plant in most hospitals and additionally there will be a wide variety of small domestic-type equipment for the local storage of food and hospital supplies. To meet the needs of the Environmental Protection Act 1990, there is likely to be an increase in the use of refrigeration for the storage and transport of hospital waste.

19.15 A refrigerator is basically a plant which extracts heat from the low-temperature source, the place being cooled, and simultaneously rejects heat to a high-temperature sink, which in a heat-pump application is the place being heated. For this to take place it is necessary to provide an additional energy input to the plant. For vapour compression refrigerators, this input is provided by an electric motor or engine driving a compressor. Absorption refrigerators use hot water or steam to heat a bubble pump.

19.16 The capacity of a refrigeration plant is the rate at which heat is extracted from the low-temperature source. In SI units this is expressed in kW. However, the term "Tons of Refrigeration", that is, the heat absorbed when one ton of ice melts over a 24-hour period, is still in common use, despite having originated in the days when ice storage was used for refrigeration. One Ton of Refrigeration is equal to 3.517 kW.

19.17 The actual refrigeration capacity of a plant depends on both the ambient temperature and that of the substance being cooled. Most manufacturers provide tables which give the cooling capacities of their plant over a range of operating temperatures.

19.18 The following paragraphs mention briefly:

a. the various types of refrigeration system and their efficiencies;

b. cooling applications in hospitals;

c. the matching of suitable refrigeration plant;

d. performance analysis;

e. option appraisal.

Basic refrigeration processes (cycles)

19.19 There are four basic types of refrigeration process or system:

a. vapour compression;

b. vapour absorption;

c. steam jet;

d. thermoelectric.

19.20 Vapour-absorption and steam-jet systems require a high energy input and have limited application, unless there is a readily available supply of inexpensive heat. This

inefficiency can be tolerated for very small cooling loads and the vapour-absorption system is used in some domestic type refrigerators. Thermoelectric systems are under development, and systems presently available are of small capacity.

19.21 The most commonly used system is the vapour-compression cycle.

Refrigerants and cycle efficiency

Refrigerants

19.22 Unlike the thermoelectric system, which produces a direct cooling effect, the other refrigeration systems are based on thermodynamic cycles and necessitate the use of an intermediate working fluid, the refrigerant. Most text books on refrigeration and the Chartered Institution of Building Services Engineers (CIBSE) 'Guide', Section B14–7 provide information on the characteristics of the various refrigerants. The classification of refrigerants is covered by BS4580, 'Specification for number designation of organic refrigerants'.

19.23 The steam-jet system uses water as the refrigerant.

19.24 The most common refrigerant in vapour-absorption systems is water with a lithium bromide absorber, and the next most common is ammonia with a water absorber. The most suitable refrigerant for a vapour-compression system depends on both the application and the cycle temperature limits.

19.25 As discussed at the beginning of this section, concern about ozone depletion has led to a review of the refrigerants in use, especially those classified as CFCs. Large vapour-compression applications in hospitals are most likely to use R22 ($CHClF_2$), an HCFC which does not have such a serious impact on the environment. These will need to be replaced when the plant reaches the end of its useful life. R22 or HCFC22 will then be replaced by R125 (or something better) as it becomes available.

19.26 Normal- or low-temperature food and process refrigeration have traditionally used R12 (CCl_2F_2), which has a much more damaging effect on the atmosphere and, in non-domestic equipment, should be phased out by the replacement R134a, or by R22 in the short term.

19.27 Ammonia (NH_3) has not been widely used within the NHS because of its toxicity. This position may need to be reviewed where secondary cooling systems are employed and where local designs can meet the British Standard (BS) specifications and any Health and Safety Executive Guidance.

19.28 The retrofitting of substitute refrigerants to existing plant may not be possible, owing to compatibility problems such as compressor lubrication and oil miscibility, corrosion of system materials and the pressure/temperature relationships of the media. Specialist advice should, therefore, be sought.

Cycle efficiency

19.29 The most important performance criterion for any type of engineering plant is the ratio of the required output to the input which must be paid for. For most systems, this is less than unity and is expressed as percentage plant efficiency.

19.30 For refrigerators and heat pumps, the same ratio is used to compare different plants and, as this ratio is normally greater than unity, the term "efficiency" is considered inappropriate. Instead, "coefficient of performance" (COP) is used. COP is defined as the rate of heat extraction from source divided by the power input.

19.31 As with boiler efficiency values, the COP of refrigeration plant can be interpreted in many ways and should always be treated with caution. Individual plants can have cycle COPs within the range 3 to 5, whereas the overall annual COP of the plant is likely to be within the range of 1 to 2.5, but this could be even lower in terms of overall cost-effectiveness and the effect on the environment. For example, absorption plants have low COPs but can operate on cheap low-grade energy that may be available from waste disposal or combined heat and power (CHP) systems during the summer when there may be a surplus of heat and a need for cooling.

Cooling applications

19.32 Virtually all significant cooling loads within hospitals, including machine cooling, food chilling and environmental control, are achieved using cold air. Air cooling can take place directly in the refrigerator evaporator or in remote heat-exchanger batteries, using chilled water as a secondary transfer medium.

Air-conditioning

19.33 A number of hospital departments, including operating theatres, manufacturing pharmacies and the inner zones of deep-plan buildings, require an input of fresh conditioned air.

19.34 The combination of high fresh-air volumes with humidity control involves substantial cooling loads with wide seasonal variations.

19.35 To accommodate the load fluctuations, the chiller plant should have a modulating output with a high COP throughout the modulation range. Alternatively a "buffer" store of chilled water can be utilised to allow intermittent operation of a fixed-output machine. The buffer store should be sufficiently large to ensure that the frequency of

machine starting and stopping (hunting) is kept to acceptable limits.

Computer installations

19.36 There has been a dramatic increase in computer applications within hospitals. Beyond the conventional administration-support computer centres, many applications using dedicated computers are now common. These include patient monitoring systems, body scanners and telephone exchanges. All of these computers, and their associated peripheral equipment, consume electrical power and generate heat.

19.37 Many large computer applications are now carried out on personal computers (PCs) or dedicated workstations, which do not normally require special cooling provision, but some large computers that have direct frame-cooling require a supply of chilled water. In very large health-service computer applications, machine cooling and humidity control are achieved using purpose-designed air-conditioning plant.

19.38 The total load on the plant will include the building-fabric heat gains or losses, the gains due to the room occupants and the heat generated by the computer hardware. Computer cooling is usually the principal load and is predominantly an all-year sensible cooling requirement with a small humidity-trim facility.

19.39 High air-change rates to provide a uniform environment are normal, using recirculated air plus minimum fresh air. With this arrangement, cooling can be achieved using a continuous modulating unit or a number of fixed-capacity units with step control, provided that the air temperatures are kept within acceptable limits. The refrigeration plant can be based on either local dedicated machines with direct air cooling or large central plant which supplies chilled water to the air-cooler batteries in the local plant.

19.40 Many computer-room air-conditioning plants incorporate a "free cooling" facility. Additional cold outside air is introduced into the recirculated room air to lower its temperature and relieve the load on the refrigeration plant.

19.41 This can also lower the room air humidity, which is particularly important where paper processing is involved, and care must be taken to ensure that the penalty for humidity correction does not exceed the saving associated with the free cooling. The problem can be avoided by utilising sophisticated enthalpy controls.

Catering departments

19.42 Refrigeration applications within the catering function range from conventional refrigerators, freezers and cold rooms for food storage to the air-blast freezers and low-temperature food-plating areas associated with cook-chill.

19.43 Refrigerators, freezers, cold rooms and air-blast freezers are usually supplied as packaged units, complete with their refrigeration plants.

19.44 Domestic and small commercial units contain the complete refrigeration plant, usually hermetically sealed, and reject heat directly into the room. Larger units have external air- or water-cooler condensers that reject heat to the atmosphere. The refrigerator plant invariably has a fixed output and cycles on and off to match the cooling load.

19.45 With a cook-chill arrangement, the food temperature should not exceed 10°C whilst in the central plating facility. This necessitates an environmental temperature below 10°C and imposes a substantial cooling load on the refrigeration plant.

19.46 The size of cooling load, its seasonal variation and the choice of refrigeration plant all depend on the design philosophy that is adopted. If low off-coil temperatures are required, chilled water from a central refrigeration plant may not be suitable and local fixed-output plant, providing direct air cooling of recirculated air, may be preferred.

Miscellaneous loads

19.47 There are a number of specialised cooling applications that use domestic-type refrigerators or standard packaged coolers. These include cabinets for the storage of drugs, medical fluids and blood, ice-makers and drink-coolers, etc. In such cases the apparatus is generally classed as a consumer durable and as such is outside the scope of this section.

19.48 Larger but discrete cooling loads, such as for body-scanning equipment and central blood banks, are served by packaged refrigeration plants which do not form part of the engineering services for the site.

Refrigeration plant

19.49 Once all significant cooling loads on a site have been identified in terms of the load intensity, minimum temperature requirement and location, various systems or plant arrangements can be considered.

19.50 Chilled water is not usually transported for long distances because of the effect of heat gains into the distribution pipework or the narrow operating temperature range (typically within 4°C to 10°C). The most common configuration is a central refrigeration plant providing chilled water, which is then distributed around a single large building to serve several air-conditioning loads.

19.51 Whenever a number of loads, particularly those with wide seasonal variations, occur in close proximity, a central chilled-water facility should be considered. These systems generally exceed 100 kW of cooling.

19.52 For individual remote loads or low-temperature applications, dedicated plant is more appropriate. This plant is usually based on individual refrigeration circuits with air-cooled direct-expansion evaporators unless the load is particularly large or variable, in which case a chilled-water plant may be viable.

Individual air-cooled direct expansion plants

19.53 Refrigeration plants which do not use a secondary refrigerant, like chilled water, as an intermediate fluid but provide direct air cooling via the evaporator are known as direct-expansion units.

19.54 Small direct-expansion units, up to 30 kW cooling, are the simplest and most common type of refrigeration plant used in hospital applications. The mode of operation of the plant or equipment being served dictates both the number of units required and the method of control, which can be:

a. cyclic, where the basic unit has limited capacity turndown but is ideal for constant loads, refrigerated stores or similar applications where a cyclic or on/off control operates within the desired temperature and time limits;

b. modulating; for continuous variable loads, as found in air-conditioning systems, a hot-gas bypass can be used to vary the refrigerator output. This arrangement has a lower first cost but is less efficient than a step-controlled alternative;

c. step, where temperature limits can be maintained with discrete steps of cooling rather than with an infinitely variable control. A number of small basic direct-expansion circuits can be utilised with a sequence or step controller. This arrangement is common in computer-room cooling applications and total cooling capacities can be 500 kW or more.

19.55 In small air-conditioning systems, two units sized at 1/3 and 2/3 of the design duty, give a three-step cooling capacity, but both system evaporator coils should be interfaced to ensure even air cooling across the air-flow path.

Chilled-water plants

19.56 Chilled-water systems are common for applications where the cooling load is continuously variable or very large. For cooling loads up to 100 kW, one or more fixed-output refrigeration units can be utilised, with cyclic control, to maintain a buffer store of chilled water, which in turn serves the variable load element.

19.57 For larger refrigeration loads, it is usual to provide two or more variable-output chiller units. This increases the overall turndown, that is, operating ranges, and provides a standby facility. The units can be connected in parallel or series arrangements. Generally, series arrangements have a higher water-circuit pressure drop and hence a higher pumping-power requirement than a parallel arrangement. With this arrangement the upstream refrigeration unit has a slightly higher mean evaporating temperature and the overall compressor power is reduced.

19.58 Regardless of the arrangement used, the method of control and the full chilled-water circuit flow dynamics should be analysed for each operating mode to ensure the integrity of the overall system design. Further guidance is given in the CIBSE 'Guide', Section B14.

Plant performance analysis

19.59 The fundamental design requirements for a refrigeration plant are that it should meet the maximum and minimum operating loads at the least-beneficial ambient conditions likely when each load occurs. To determine the annual energy consumption for a plant option, detailed information would be required on:

a. load variations, including distribution gains throughout the year;

b. corresponding ambient conditions to which heat is rejected throughout the year;

c. overall average COP at the various operating conditions, including an allowance for the compressor power associated with the refrigerant-pipework drop;

d. method of control;

e. energy consumption of all ancillary equipment such as chilled-water pumps, air-cooled condenser fans and plant-room ventilation fans.

19.60 Even if this information is collated, an accurate analysis is particularly onerous. Consequently, the usual method for estimating annual energy consumptions is based on average loads and assumed levels of performance. This invariably leads to an underestimate of the total cooling load. However, the availability of detailed weather data and the increased use of computers will allow more accurate performance analyses to be undertaken in the future. An oversized refrigeration plant can present serious control problems and excessive margins should be avoided.

19.61 Information can be obtained from the manufacturer for standard cooling equipment with integral refrigeration plant, for both the peak and overall average energy consumptions. This information is generally reliable and satisfactory for comparative purposes.

19.62 For larger and more complex cooling applications as found in air-conditioning systems, it is necessary to analyse the useful end load as well as the refrigeration plant performance, to determine the overall energy consumption.

Cooling loads

19.63 The total refrigeration load for an environmental cooling application usually includes a combination of the following elements:

a. heat gains from energy-consuming equipment;

b. sensible and latent gains from occupants;

c. building-fabric heat gains/losses;

d. the psychrometric processes necessary to achieve the desired room conditions;

e. the heat gains within the chilled-water distribution system.

19.64 Sufficient information is required on each load element to enable a load model or hourly load profile to be constructed for the full cooling season.

Energy consumption and overall COP

19.65 For each level of cooling load and corresponding outside ambient condition, the rate of energy input into the refrigeration plant, and hence the true overall COP, can be determined. This will be dependent on the type of refrigeration unit and the method of control.

Fixed-capacity direct-expansion units

19.66 The energy input to a basic air-cooled direct-expansion unit can be taken as constant while the machine is running. This includes both the refrigeration compressor and condenser-fan power. The refrigeration plant manufacturer/supplier should provide information on the cooling capacity of individual units at various ambient conditions, including any adjustments to allow for the refrigerant-pipework pressure drop.

19.67 By equating each increment of load to the corresponding refrigerator capacity, the number of refrigeration units required and their running time can be established. The total annual running time multiplied by the fixed power input gives the annual kWh consumption for cooling.

19.68 Based on the practical refrigeration cycle the COP for this type of plant can be 2.5 or more. However, the overall annual COP including fan power can fall to 1.5 or less.

Modulating direct-expansion units

19.69 The energy input to an air-cooled direct-expansion unit with a hot-gas bypass can be taken as constant, despite the fact that the output can vary. The energy analysis is similar to that above, except that the refrigeration units run on a continuous rather than an intermittent basis. This extends both the running time and energy input for a given load, which results in overall COPs of 1.0 or less.

Multiple-chiller plants

19.70 Larger water chillers have a step or linear range of outputs and corresponding inputs that are well documented in manufacturers' data sheets. For each load increment the input power to the compressor (including any allowance for long refrigerant-pipework runs, the condenser fans, the chilled-water pumps and any other ancillary plant) can be determined.

19.71 The total of the individual power inputs for each of the various load increments will give the total annual kWh energy consumption. The resultant overall COP can be as high as 2.0.

Overall performance

19.72 Overall performance can be significantly lower than is indicated by these COPs and is dependent on plant utilisation where the unit cannot be shut down completely when not required. It is very important that, for widely varying duties, as many separate units as economically viable are used.

Option appraisal

19.73 There are a number of alternative plant options for virtually all cooling applications where a suitable refrigeration plant has to be selected to serve a particular load.

19.74 Cooling loads over 40 kW invariably necessitate more than one refrigeration unit and possible options include alternative numbers and sizes of units, as well as modulating- or fixed-output variants. The load matching philosophy is similar to that used to select suitable boiler plant arrangements (see Section 11).

19.75 Once a shortlist of practical options has been produced, the capital and revenue implications of each alternative option should be assessed to determine its financial viability.

Revenue items

19.76 The performance analysis described above provides data on the annual electrical consumption for each option.

This data can be compared to the electricity supply tariff for the particular site in terms of both unit and maximum demand (MD) charges, to determine the annual energy running cost.

19.77 Refrigeration plant is relatively complex regarding maintenance requirements, and specialist maintenance contracts are generally used. Peak efficiency and maximum cost-effectiveness will only be sustained whilst the refrigeration system remains free from leaks. This is also extremely important to the environment while CFC refrigerants remain in use. Properly trained staff or consultants should be employed regularly to check for leaks and faulty components. These procedures should be incorporated into planned preventative-maintenance schedules.

Capital items

19.78 Refrigeration plant has been used in air-conditioning systems for many years and many applications, such as computer rooms, have an all-year-round cooling load. The design and reliability of this plant has progressively improved and a design life of 15 years is appropriate for option appraisal.

Financial appraisal

19.79 A suitable financial appraisal procedure for the various technically acceptable refrigeration-plant options related to a particular application is described in Section 26. This procedure involves the completion of a financial assessment sheet for each option. This can be used in conjunction with the "base-option" data to determine a simple payback period and a Benefit Cost Ratio (BCR). The most suitable option is that with both a high BCR and a short simple payback period.

Energy-efficient refrigeration plant

19.80 Many refrigeration plants are sized and installed to cater for the maximum required cooling load while operating with a reasonably high COP at this design condition. This can result in an inefficient plant arrangement as:

a. the design conditions rarely occur and the plant's COP can fall dramatically as the operating conditions vary. Thus the actual overall operating COP is substantially lower than the design value;

b. once a plant is installed and operating under automatic control there is a little scope for improving its energy efficiency. A detailed appraisal of the proposed plant performance is necessary at the design stage.

Summary

19.81 The following list summarises a number of important factors that have been discussed in the text above and could influence the energy/cost efficiency of a refrigeration plant:

a. site-related factors:
   - (i) is cooling and ventilation necessary? Can comfort conditions be achieved by an alternative means? Ventilation fans are also expensive to run;
   - (ii) can the heat rejected from the refrigeration plant be usefully employed, thus making a heat pump viable?;

b. plant-related factors:
   - (i) do not provide excessive plant capacity on a single-unit installation;
   - (ii) is it worthwhile to use "free cooling" for periods when the external air temperature falls below the recirculated air temperature after any humidification penalty has been taken into account?;
   - (iii) consider a chilled-water buffer-storage system with intermittent operation as an alternative to a modulating direct-expansion plant with an inefficient hot-gas bypass arrangement;
   - (iv) is a cascade arrangement practical where multiple refrigeration units are to be used?;
   - (v) can the proposed plant modulate to match the required cooling load without an excessive drop in the overall plant COP?;

c. operational factors:
   - (i) is the refrigeration plant on-line only during periods when a cooling load exists?;
   - (ii) are the refrigeration-plant control-system set points suitably adjusted to ensure that the on-line refrigeration capacity matches the applied cooling load?
   - (iii) are multiple sets running when one is sufficient?

Support and reference material

British Standards (current at December 1993)
BS4434 – Specification for safety aspects in the design, construction and installation of refrigerating appliances and systems. 1989.
BS4580 – Specification for number designation of organic refrigerants. 1970 (1987).

Chartered Institution of Building Services Engineers
CIBSE Commissioning Code R: Refrigeration systems. Chartered Institution of Building Services Engineers, 1991. ISBN 0900953497.
CIBSE Guidance note: Chlorofluorocarbons, professional and practical guidance. 1989. ISBN 0113213050.
CIBSE Guide:
Volume A – Design data. Chartered Institution of Building Services Engineers (CIBSE), 1986. ISBN 0900953292.
Section A9 Estimation of plant capacity. 1979 (Supplemented 1983).
CIBSE Guide:
Volume B – Installation and equipment data. Chartered Institution of Building Services Engineers (CIBSE), 1986. ISBN 0900953306.
Section B14 Refrigeration and heat rejection.

Engineering Data Sheets
DH2.9 Refrigeration and air-conditioning services in hospitals. DHSS, 1978.

NHS Model Engineering Specifications
Model specification for building services, Part C, Section 10 – Refrigeration. NHS Estates, 1993.

Textbooks
Pita, Edward G. **Air-conditioning principles and systems: an energy approach**. Second revised edition. John Wiley and Sons, 1989. ISBN 047186060.
Stoecker, Wilbert F and Jones, J W. **Refrigeration and air-conditioning**. Second revised edition. McGraw-Hill, 1982. ISBN 0070616191.

Contents

20.1 Introduction *page 107*

20.3 Nomenclature *page 107*

20.6 Levels of illuminance *page 107*

20.8 Energy-efficient lamps *page 107*
- 20.9 Tubular fluorescent lamps
- 20.14 High-frequency ballasts
- 20.16 Compact fluorescent lamps
- 20.23 Sodium discharge lamps
- 20.26 Colour rendering
- 20.27 Reflectors for fluorescent fittings
- 20.29 Gear losses in fluorescent and discharge fittings

20.30 Control of lighting *page 109*
- 20.31 Time-delay switches
- 20.32 Photocell control
- 20.34 Occupancy detectors
- 20.35 Local-area and mains-borne switching
- 20.36 Timer controls

20.37 Lighting replacement policy *page 110*
- 20.37 Existing installations
- 20.38 Refurbishments
- 20.39 VDU areas
- 20.48 The steps to an energy-efficient lighting scheme
  - 20.48 Step 1: Survey
  - 20.49 Step 2: Identify areas for savings
  - 20.50 Step 3: Estimate hours
  - 20.51 Step 4: Obtain costs
  - 20.52 Step 5: Estimate payback
  - 20.53 Step 6: Implement

Support and reference material *page 114*

20.0 Lighting

Introduction

20.1 This section describes current good practice in energy-efficient lighting, and what can be done to improve or refurbish existing installations. It does not cover the design of lighting installations or the physics of lamp operation.

20.2 The energy used by a lighting installation is the product of the power input to the system, and the length of time that the system is used. Energy savings can be made by:

a. reducing the power requirement of the system by using energy-efficient lamps;

b. reducing the power requirement of the system by dimming (if appropriate);

c. reducing, by improved controls, the amount of time that the system is used;

d. reducing, through good housekeeping, the amount of time that the system is used.

Nomenclature

20.3 The quantity of light from a fitting is measured in lumens, and is known as the luminous flux.

20.4 The lighting level on a surface is measured in lux (the number of lumens per square metre). This is also known as the illuminance and is the value given by a light meter.

20.5 The efficiency of a light source is measured in lumens per watt, and is known as the luminous efficacy. The higher the value of efficacy, the better.

Levels of illuminance

20.6 Levels of illuminance differ according to the areas to be lit, and the types of work to be done there. Recommended levels are given in the Chartered Institution of Building Services Engineers (CIBSE) 'Lighting guide LG02 – Hospitals and healthcare buildings' and 'Lighting guide LG03 – Areas for visual display terminals', which are also recommended for further information on the general subject, in British Standard (BS) 8206 and various Health Building Notes (HBNs) (in Scotland, Scottish Hospital Planning Notes (SHPNs)) and Health Technical Memoranda (HTMs).

20.7 In addition to providing adequate illuminance, it is important to avoid problems with glare. This applies particularly in areas with high usage of visual display units (VDUs). The recommended illuminance values given in Building Research Establishment (BRE) publication, 'Energy efficiency in office lighting', September 1989, for background lighting in offices are 250 to 350 lux. This assumes that these levels can be augmented where necessary by local task lighting.

Energy-efficient lamps

20.8 There have been major advances in the development of energy-efficient lamps and these are described below.

Tubular fluorescent lamps

20.9 Tubular fluorescent lamps first became available in the 1940s. The first lamps had luminous efficacies of 35 lumens per watt. These efficacies have gradually improved up to today's values for argon-filled tubes of 55 lumens per watt.

20.10 Recently, krypton-filled tubes have become available, which give about 8% energy savings compared to argon-filled tubes. Krypton-filled tubes can be used to replace those in existing fittings, **but only in the switch start circuit and electronic start circuit type**. Quickstart circuits do not generate sufficient voltage to start the lamps.

20.11 Energy-efficient krypton-filled tubes have an additional benefit in that, as they are 26 mm in diameter, rather than the conventional 38 mm, they require 33% less storage space. (The 2400 mm krypton-filled energy-efficient tube is an exception to this, being 38 mm in diameter. This is because a smaller diameter would not give a sufficiently strong tube.)

20.12 These slimline energy-efficient tubes are sometimes referred to by the designation T8, with conventional tubes as T12. This is a lighting industry convention of measuring tube diameters in multiples of 1/8 of an inch. Their cost is virtually identical to that of the conventional tubes, so replacement on re-lamping may be considered to be a no-cost energy saving.

20.13 The suitability of existing T12 tube fittings for krypton-filled tubes will often be visually appreciable from the presence of starter ballasts (the small circular devices

mounted in the sides of the fittings) but the advice of the re-lamping contractor should be sought.

High-frequency ballasts

20.14 Another recent development is the introduction of high-frequency ballasts for fluorescent tubes. These ballasts use less power than conventional types, and also improve the efficiency of the lamp. This gives luminous efficacies of up to 95 lumens per watt. The high frequencies used eliminate stroboscopic effects, and also give a very good power factor.

20.15 High-frequency fluorescent fittings are suitable for new installations, or where complete fittings are to replaced, but are relatively expensive. These fittings have the further advantage that they can be dimmed, and their use together with a daylight-linked control system can give additional energy savings.

Compact fluorescent lamps

20.16 Tungsten lamps (incandescent light bulbs) are very cheap, but have very low luminous efficacies and a relatively short life. They are sometimes referred to as general lighting service (GLS) lamps. With developments in the design of compact fluorescent lamps, most GLS lamps can be directly replaced in the existing fittings.

20.17 Compact fluorescent lamps are available in three basic types:

a. those with an integral ballast, such as the Philips PLC*E range;

b. those suitable only for purpose-designed light fittings;

c. those which plug into a base which houses the ballast.

20.18 The latter type have the advantage that, when the lamp reaches the end of its useful life, the base is retained, giving some cost savings. In addition to energy savings of about 65%, these lamps will produce cost savings by reducing the need for re-lamping – they typically have lives of 8,000 hours compared to 1,000 hours for GLS lamps.

20.19 Compact fluorescent lamps cannot be dimmed, and have the disadvantage in some cases of a very low power factor. However, unless very large numbers of them are installed, this is unlikely to affect maximum demand (MD). Some compact fluorescent lamps are quite heavy, and may not be well suited to particular fittings.

20.20 Claims for the light output of compact fluorescent lamps can be over-optimistic. Some manufacturers' claims that a certain lamp "replaces a 100 watt bulb" are plainly not true. Table 24 can be used for a rough comparison of the lumen outputs of particular lamps.

20.21 The luminous efficacy of lamps varies considerably. Values for GLS and some compact fluorescent sources are given in Table 24.

Type	Power (watts)	Initial output (lumens)	Design output (lumens)	Circuit power (watts) (power plus gear loss)	Luminous efficacy
GLS	60	710	675	60	12
	75	940	890	75	13
	100	1360	1290	100	14
	150	2180	2070	150	15
	200	2900	2730	200	15
	300	3450	4370	300	16
2-D	16	1050	925	21	66
	28	2050	1800	36	73
PL/DLS	9	600	550	12.8	67
	2 × 9	950	870	17.7	53
PL/DLL	18	1250	1150	27	69
	2 × 18	2575	2350	46	72
PLC/DLD	10	600	550	12.8	60
	13	900	850	17	69
	18	1250	1150	23	69
	26	1800	1650	30	69
PLCE/DLEL	10	600	540	10	60
	15	900	810	15	60
	20	1200	1080	20	60
Circolux	18	1000	920	18	56
	24	1450	1330	24	60
T5 fluor	2 × 8	960	840	21	60

Table 24 Comparison of GLS lamps with some compact fluorescent lamps (source: CIBSE, 1989)

20.22 The use of energy-efficient lamps should not reduce user comfort. Some early types of compact fluorescent lamps took a lengthy period, perhaps a minute or two, to come up to full light output. The more recent types do not suffer from this problem.

Sodium discharge lamps

20.23 Sodium discharge lamps were originally developed in low-pressure types for street lighting. Low-pressure sodium lamps (SOX) are very efficient, but give virtually monochromatic light (orange) with poor colour rendering. Increasing the pressure in sodium lamps improves the quality of light at the cost of some luminous efficacy, and so-called de-luxe versions of this lamp (SON-DL) have been used for interior lighting.

20.24 High-pressure sodium lamps are available for the direct replacement of 250 and 400 watt mercury lamps in existing fittings. These lamps have the designation SON/H.

20.25 A major disadvantage of sodium discharge lamps is that the interval between switching on and full light output is four to seven minutes. They are not generally suited for office lighting, but they have been successfully used in uplighters in areas such as typing pools, to avoid glare on VDU screens.

Colour rendering

20.26 The colour-rendering property of lamps is their ability to reveal colours seen by their light. There are colour-rendering indices and manufacturers publish "spectral-power distribution curves" for their light sources. In general, the major lamp types have the following colour-rendering characteristics:

- tungsten – acceptable – blues dull, oranges and reds bright;
- fluorescent – good to very good, dependent on choice of tube;
- high-pressure sodium (SON) – poor – colours distorted, blues dull, yellows and reds bright. However, the de-luxe lamp (SON-DL) is considerably better than this;
- low-pressure sodium (SOX) – no colour-rendering properties. Monochromatic light source for streetlighting and security lighting.

Reflectors for fluorescent fittings

20.27 A number of companies supply reflectors for twin-tube linear fluorescent fittings. These reflectors are usually tailor-made to fit particular luminaires, and tend to be expensive. They are claimed to give energy savings by increasing the useful downward light output, thereby permitting the removal of one of the tubes. Their high initial cost means that these reflectors are best suited to areas where lighting is required for extended periods. In normal office areas, with reasonable daylighting, and good housekeeping, their payback periods will be unacceptably long.

20.28 Before considering the use of reflectors, it is worthwhile examining the condition of existing diffusers. Dirty or yellowing diffusers will cut down light output. They should be cleaned or replaced prior to the consideration of more costly measures.

Gear losses in fluorescent and discharge fittings

20.29 Unlike GLS bulbs, fluorescent tubes and discharge lamps such as high-pressure sodium lamps cannot be plugged directly into the mains electricity supply. In order to start these light sources, further circuitry external to the lamp is required. In fluorescent lamps this is commonly referred to as the "ballast", whilst discharge lamps require an "igniter". A small amount of additional electrical power is used in these external circuits. This is the "gear loss". The overall electrical consumption is thus the power used by the lamp plus the gear loss (Table 24 illustrates this point for some compact fluorescent lamps).

Control of lighting

20.30 Lighting controls can produce significant energy savings. In some circumstances it may be more appropriate to improve control of lighting rather than replace fittings. Guidance on the appropriate use of lighting controls is given in Table 25, together with indications of potential energy savings. A wide variety of control systems are currently available including:

- time-delay switches;
- photocell control;
- occupancy sensors;
- local-area switching;
- mains-borne switching;
- timer controls;
- energy and building management systems (BMS).

Time-delay switches

20.31 Time-delay switches can be appropriate for infrequently used rooms where lights may accidentally be left on. These switches can be adjusted to give a period of illumination, then automatically switch off. Versions are available which will sound an audible warning shortly before switching off. They can be switched back on should a further period be required.

Photocell control

20.32 Photocell control automatically switches lights off, or dims them, according to levels of daylighting available. The success of this type of control depends on the switching pattern of the lights. In deep-plan offices, areas nearest windows will receive considerably more daylight than internal areas; only rows of lights close to windows should be switched.

20.33 On/off daylight control gives coarse regulation of lighting levels. In an office with a design illuminance of 500 lux, the lighting control system will switch off the artificial lighting when daylight alone will give 500 lux. Since the lighting system will have been designed to give 500 lux by itself, the switch-off level will be 1,000 lux. There will be an abrupt drop of 50% in lighting level, which may be disruptive and cause complaint. The use of dimming is a better solution, but will be more expensive.

Type of switching	Lighting control type	Open plan offices	Cellular offices	Office with daylight	Office without daylight	Large storage areas
Manual	Wall switch	*	*	***	***	X
	Pull-cord on each fitting	**	*	*	*	X
	Hand-held remote controls	***	***	*	*	***
Automatic	Timed bulk off-switching	**	**	***	X	***
	Photocell off-switching	***	***	*	X	**
	Daylight-linked dimming	**	X	*	X	*
Potential energy savings		40%–70%	40%–70%	30%–50%	10%–20%	40%–60%

Asterisks indicate degree of appropriateness; the more the better. X indicates method is not appropriate

Table 25 Application of lighting control technologies

Occupancy detectors

20.34 The use of occupancy detectors may be viable in infrequently used areas such as stores, corridors, and underground carparks. These detectors switch on lights when areas are entered, and switch off automatically when the area is vacated. It is important to ensure that there are no blind spots where people would be outside the detection area of the sensors. Multiple sensors may be necessary.

Local-area and mains-borne switching

20.35 Local-area switching can be as simple as the installation of pull-cord switches on fluorescent fittings above desks. It can be as sophisticated as the use of BMS to control individual fittings from individual codes dialled on internal telephone networks, or from individual remote controllers to send mains-borne switching signals to particular lamps. Simple local switching will be cost-effective at any time, but the installation of mains-borne switching is only likely to be so in major refurbishments.

Timer controls

20.36 Timer controls can be used to switch off all or part of a building's lights shortly after the building is vacated. Such a system is obviously best suited to buildings where occupants leave at a fixed time, but they can be combined with local-area switching so that those occupants remaining can switch their own area back on. These systems can also be used to switch lights off around lunchtime on the assumption that many offices have been vacated. If daylighting levels are good, these lights may not be switched back on again in the afternoon. Timer control is best used only to switch lights off, leaving switching on to building occupants. With variable starting times, this may produce substantial energy savings.

Lighting replacement policy

Existing installations

20.37 In existing installations, the aim should be to:

a. replace GLS bulbs with compact fluorescent lamps;

b. replace 38 mm fluorescent tubes in switch start circuits with 26 mm krypton-filled tubes;

c. ensure that, where energy-efficient lamps are installed, replacements are held in stores.

Refurbishments

20.38 When refurbishments are planned, or new installations designed:

a. light offices and ancillary areas using 26 mm high-frequency fluorescent fittings;

Lighting survey sheet

Building ..... Floor ..... Sheet .... of ....

Room No/name	GLS lamps			Fluorescent lamps						Discharge lamps				Total power (Watts)
	Power (Watts)	Number	Total power (Watts)	Length (metres)	Tube type[1]	Circuit type[2]	Circuit power[3] (Watts)	Number	Total Power (Watts)	Type	Circuit power (Watts) ⧺	Number	Total	

1 Identify tube type by diameter, T12 (38 mm) or T8 (26 mm).
2 Identify circuit type as either switchstart, or quickstart.
3 Include gear losses for fluorescent, and discharge lamps.

Figure 77 Lighting survey sheet

b. investigate the use of BMS, where these are to be installed, for daylighting control of lighting;

c. consider the use of background lighting, with local task lighting for areas with high densities of VDUs.

VDU areas

20.39 For areas where VDUs are in wide usage, it is important to minimise glare on screens. A variety of lighting solutions may be available such as:

- high-frequency fluorescent lamps with dimming controlled from daylight sensors;
- background lighting from energy-efficient fluorescent tubes to give levels of 250 lux to 350 lux with task lighting provided on individual desks from low-energy compact fluorescent lamps;
- discharge lamps like high-pressure sodium lamps (SON) in uplighters.

20.40 Systems like these would give about 50% savings compared to currently used fluorescent systems. This is not, however, a solution which can be adopted by fitting new lamps to existing fittings; new fittings must be installed.

20.41 In new installations, high-frequency fluorescent lamps are very energy-efficient, but relatively costly. Uplighter installations require fairly reflective ceilings, and in open-plan offices would require floor-standing, rather than column- or wall-mounted, fittings. The most commonly adopted solution in areas of high VDU use has recently been background lighting from energy-efficient fluorescent lamps to give levels of 250 lux to 350 lux, with task lighting provided on individual desks from low-energy compact fluorescent lamps.

20.42 Such a system would ensure compliance with the EC Council Directive 90/270/EEC, 21 June 1990 on the minimum safety and health requirements for work with display screen equipment. This Directive required legislation to be introduced by 31 December 1992 with the following objectives:

- "the screen shall be free of reflective glare and reflections";
- "suitable ambient lighting is required so as to provide satisfactory working conditions and an appropriate contrast between the screen and the background environment";
- "lamps for secondary activities shall be provided where necessary. They shall be adjustable so as not to cause glare or reflections on the screen".

20.43 It should be noted that workstations installed before 31 December 1992 have four years to comply with the legislation.

20.44 Whilst such refurbishment often cannot be justified on energy savings alone, major benefits would be seen in user satisfaction. For all installations, it is worth ensuring that, when energy-efficient lamps are installed, replacements are stocked in stores.

20.45 New installations should be carefully designed to give the required lighting levels. Replacement of inefficient fittings with a similar number of efficient fittings will give excess lighting levels (unless levels were previously inadequate), cause glare problems and will be wasteful of energy. It is important to check both the installed capacity of proposed refurbishments in terms of their watts per square metre of floor-area demand, and the efficacies of the lamps to be used. The gear losses of fluorescent or discharge lighting should be included.

20.46 A good design giving 500 lux at desk level for an office should have an electrical demand of 12.5 to 15 watts per square metre. If the demand is greater than 17.5 to 20 watts per square metre the design should be revised.

20.47 Low-pressure sodium (SOX or SOX-E) streetlights should be used for external amenity lighting and high-pressure sodium (SON) floodlamps for security lighting. If closed-circuit TV systems are in use in areas to be lit, specialist advice should be sought before replacing lamps.

The steps to an energy-efficient lighting scheme

Step 1: Survey

20.48 Survey the lighting using the lighting survey sheet (Figure 77). Identify lamp powers and include the gear losses for fluorescent and discharge lamps.

Step 2: Identify areas for savings

20.49 Identify areas where savings can be made. These will include measures such as the replacement of GLS lamps with compact fluorescent lamps, use of T8 tubes in switch-start fittings, use of pullcords for individual lights etc.

Step 3: Estimate hours

20.50 Estimate the number of hours a year that the lights it is intended to replace are used. For lighting control systems, estimate the reduction in use in hours per year. (An office building is typically used for about 2,500 hours per year.) In well-daylit areas, lights may be used for much shorter periods.

Step 4: Obtain costs

20.51 Obtain estimates of the cost of the lighting system, or control system intended. Include installation and commissioning costs as well as the initial capital costs.

Payback calculation sheet

Proposed system:		
	Existing system	Proposed system
Annual hours use (a)		
Light/lamp type		
Electrical load per fitting (Watts) (b)		
Number of fittings (c)		
Total electrical load (kW) (d = b x c ÷ 1000)		
Annual electrical use (kWh) (e = a x d)		
Cost of electricity (pence per kWh) (f)		
Annual electrical cost (£) (g = e x f ÷ 100)		
Annual electrical cost savings of proposed system (£) ($h = g_{existing\ system} - g_{proposed\ system}$)		
Annual electricity saving of proposed system (kWh) ($= e_{existing\ system} - e_{proposed\ system}$)		
Capital cost of proposed system (£) (i)		
Payback period (years) (= i ÷ h)		

Figure 78 Payback calculation sheet

Step 5: Estimate payback

20.52 Estimate the payback period of the proposed energy-efficient lighting system or control system, using the worksheet (Figure 78). Worthwhile projects will pay for themselves within five years.

Step 6: Implement

20.53 Implement the planned energy-efficient lighting installation.

Support and reference material

Encode 1
ESAM.

Health Building Notes (HBNs), Scottish Health Planning Notes (SHPN) and Health Technical Memoranda (HTMs)
Various HBNs (in Scotland, SHPNs) and HTMs contain standards.

Chartered Institution of Building Services Engineers
CIBSE Lighting Guide LG02. Hospitals and health care buildings. Chartered Institution of Building Services Engineers (CIBSE), 1989. ISBN 0900953373.
CIBSE Lighting Guide LG03. Areas for visual display terminals. Chartered Institution of Building Services Engineers (CIBSE), 1989. ISBN 0900953411.

British Standards (current at December 1993)
BS8206 Lighting for buildings:
Part 1 **Code of practice for artificial lighting**. 1985 (1992);
Part 2 **Code of practice for daylighting**. 1992.

Building Research Establishment (BRE)
Energy efficiency in office lighting. Building Research Establishment/BRESCU Information Leaflet 2, 1989.

Contents

21.1 Introduction *page 117*

21.4 Electro-medical equipment *page 117*

21.5 Office equipment *page 117*

21.6 Computers and other information technology *page 117*

21.14 Hand driers *page 118*

21.15 Instantaneous electric showers and water heaters *page 118*

21.16 Vending machines and microwave ovens *page 118*

Support and reference material *page 118*

21.0 Small power

Introduction

21.1 The small-power requirement for hospital buildings is difficult to quantify, in terms of both the actual electrical load and annual consumption. However, the quantity and usage of small-power equipment has increased in recent years. This includes the use of patient administration systems (PAS), body scanners, telephone exchanges etc, and has made a significant contribution to the overall increase in electricity consumption. It is important that small-power requirements are not overlooked.

21.2 Management should continually strive to obtain a better degree of sub-metering of the electrical supply to each department or building (see Section 11).

21.3 Some examples of the small-power equipment used in hospital buildings are given below.

Electro-medical equipment

21.4 Both the quantity of electro-medical equipment for medical and nursing purposes and its sophistication have increased substantially over recent years, resulting in an increase in electrical consumption.

Office equipment

21.5 Over recent years, the amount of electrical and electronic office equipment (including photocopiers, typewriters, print machines, facsimile machines, telex machines etc) has increased considerably. Although the electricity consumption of individual machines may be fairly small, when the number of machines in use is taken into account the electricity consumption is significant.

Computers and other information technology

21.6 Changing working practices have led to the increasing use of information technology (IT) equipment. This has meant a significant increase in energy consumption, which will continue as new computer applications are developed. In many areas there is a one-to-one ratio of personal computers (PCs) to staff. A typical PC visual display unit (VDU) uses 35 watts and its processor 165 watts (or 29 watts when idling).

21.7 Laser printers can consume 870 watts when printing (or some 60 watts when idling). The percentage idle time for printers is very high and a typical secretarial output may be of the order of only 30 minutes a day of actual printing time. For the balance of the time, at least 7.5 hours a day, the machine consumes as much as a 60-watt light bulb – a total waste of energy. The sharing of laser printers between users, via a network or "T" – or multi-channel switches, can present an opportunity to make energy savings. Printers should be switched off when not in use.

21.8 The IT industry is reacting to concerns for reduction of energy consumption and to other green issues. For example, the industry has announced a new energy-efficient chip which will enable PCs to go into "sleep" mode when not in use. Machines with power-management software are available. This causes both the inactive display and the machine to shut down stepwise, via standby mode, to power-save mode, which uses as little as 8% of the normal operational energy.

21.9 IT equipment has become an essential part of many working environments. Despite the general familiarity with the technology, sensitivity to the particular requirements of individual systems is important. Many computer systems have specific close-down routines to be run before being switched off. There are many different systems with varying operational requirements. The following broad guidance may nevertheless be helpful:

a. staff should be advised never to touch systems with which they are unfamiliar;

b. staff should be encouraged to make themselves familiar with the systems which they use, and to act accordingly;

c. staff should be advised always to seek guidance from the appropriate IT systems support unit when unsure;

d. machines should not be switched on until needed. Where machines and networks are required to be run throughout the day, it may be possible to switch off the VDU screen when not needed. Other, totally independent stand-alone PCs should only be switched on when required;

e. machines which are not going to be used for some time (an hour or more), should be switched off. This particularly applies to stand-alone machines and those which do not have to be powered down after every period of use. It is important to know the constraints relative to each machine;

f. all terminals and stand-alone processors should be switched off at the end of each day.

21.10 Where computers are sensitive to small changes in temperature and humidity, it may be necessary to provide a closely controlled environment using a suitable air-conditioning system. The air-conditioning system can be either a central-station plant, as discussed in Section 14, or a local package-type computer-room air-conditioned unit. The local-package unit has the advantage that the fresh-air cooling load can be much reduced.

21.11 Local-package computer-room systems do not necessarily require low-pressure hot water (LPHW) or chilled water from external plant. This independence, combined with total "turnkey" contracts offered by the computer supplier, has made them both common and popular with the end user.

21.12 In addition to the electrically powered refrigeration plant, reheat is achieved using a multi-stage electric heater battery and humidification using an electrically heated water boiler. Thus the electrical consumption of this type of air-conditioning unit is quite considerable and can, in certain cases, equal the electrical consumption of the computer and its peripheral equipment.

21.13 Details of the refrigeration requirements of large computer installations are given in Section 19.

Hand driers

21.14 Electric hand driers offer a convenient, low-maintenance cost alternative to a towel service and are now common in the NHS. The electrical loads are significant and occur during periods of peak demand. Proximity-switch hand driers are possibly a better energy saver, but objects such as waste bins should not be placed below them.

Instantaneous electric showers and water heaters

21.15 Electric showers and water heaters have a relatively low installation cost and are often used in staff accommodation or in remote buildings where a suitable recirculating hot water supply is not available. The electrical loads are high, typically 7 kW to 9 kW, and the increase in maximum demand (MD) can be onerous, particularly on small sites. **Guidance on delivered water temperature is given in the Health Guidance Note, '"Safe" hot water and surface temperatures'**.

Vending machines and microwave ovens

21.16 These are often used to provide unstaffed night-time or 24-hour casual meal facilities.

Support and reference material

Health Guidance Note **"Safe" hot water and surface temperatures**. NHS Estates, HMSO, 1992. ISBN 011321404918.

Contents

22.1 Introduction *page 121*
- 22.4 System tuning
- 22.5 Control-system settings
- 22.7 Modifications to control systems
- 22.10 Implementation of controls alterations
- 22.12 Specialist controls contractors

22.14 Temperature scheduling controls *page 122*
- 22.15 Weather compensators
- 22.23 Time switching
- 22.26 Time-switch facilities

22.28 Combined time and temperature scheduling *page 123*
- 22.28 Night set-back control
- 22.29 Optimum start control

22.34 Individual emitter and room controls *page 123*
- 22.34 Thermostatic radiator valves (TRVs)
- 22.35 Room-control options

22.37 Building management systems (BMS) *page 124*
- 22.39 Description of systems
- 22.42 Outstations
- 22.44 Communications protocol

22.46 Selecting a BMS *page 124*
- 22.48 Strategic considerations
- 22.52 Important factors
- 22.53 The role of energy management
- 22.56 Contract procedures and commissioning
- 22.58 Establishing and developing a system
- 22.60 Justification
- 22.61 Training

22.62 Building-management features *page 126*
- 22.63 Fixed time control
- 22.64 Optimum start- and stop-time control
- 22.65 Temperature monitoring/control
- 22.66 Status monitoring/logging
- 22.67 Frost protection and night set-back
- 22.69 Outside-air-temperature shut-off
- 22.70 Reporting and logging
- 22.71 Simple operation

Support and reference material *page 127*

22.0 Building and energy management and control systems

Introduction

22.1 The upgrading or replacement of existing building-services control and monitoring systems can potentially make a considerable contribution to energy saving.

22.2 The primary function of control systems is to match equipment output to a varying load, for example, temperature and humidity. The primary function of a monitoring system is, as accurately as is necessary, to observe the conditions pertaining to the environment, for example, temperature, humidity and consumption. These two functions are complementary and, used together, they provide a very powerful management tool.

22.3 The problem for most estates is that, whilst controls are an essential part of a building's design regime, the monitoring facilities are not, and were not included in either the original or subsequent building contracts. There is no doubt as to the cost-effectiveness of monitoring facilities. Energy managers should take steps to invest in essential measurement facilities to enable the optimisation of the measures described below.

System tuning

22.4 Alterations and additions to control and monitoring systems can reduce energy demand by:

a. matching equipment output to the varying demands of each room/space more closely;

b. reducing the energy losses in distribution systems;

c. enabling energy managers to match demand to results more accurately.

Control-system settings

22.5 The settings of existing controls should be examined and recorded, especially temperature settings at controllers and thermostats. A 1°C reduction of average space temperature represents a 10% to 30% reduction in heat load.

22.6 The calibration of existing controls should be checked using thermometers, hygrometers etc, to ensure that they are operating at least reasonably closely to expectations and set points. The saving can be substantial.

Modifications to control systems

22.7 Existing building-services installations will have many different temperature set points and controls, for distribution, local temperature conversion and emitting equipment. These types of control function are grouped together broadly as either time-scheduled or temperature-scheduled. Table 26 provides a summary of the control options to be considered.

Type of control	Options
Time-scheduled	Annual summer/winter switching
	Solar-dial time switching
	7-day time switching
	24-hour time switching
	Count-down timing
Temperature-scheduled	Weather compensators
Time- and temperature-scheduled	Thermostatic radiator valves
	Night-time temperature set-back
	Optimum plant starting time
Building management system (BMS)	Any combination of the above, together with monitoring

Table 26 Control options

22.8 The energy lost in distribution mains can be up to 10% of the peak design demand. As a consequence, if the average demand is half the peak, the distribution losses could represent 20% of the average load.

22.9 The temperature scheduling in accordance with the overall load, is dependent on the type of system and can be effective at all levels, but is only possible if equipment lower down the distribution network does not need a constant temperature. Because of this, any items requiring a constant distribution temperature should be closely examined. These may be:

a. steam or hot-water distribution:
   (i) domestic hot-water calorifiers;
   (ii) air-heater batteries;

b. chilled-water distribution air-handling unit chiller batteries;

c. air distribution:
   (i) variable air volume (VAV) terminal systems;
   (ii) dual/duct mixing systems.

Implementation of control alterations

22.10 The separation on the distribution network of all items requiring constant temperature from all other items of heating/cooling equipment should be considered. This will require evaluation of pipework alterations prior to control alterations.

22.11 Special controls may need to be considered in order to provide temperature scheduling, but with a facility to set minimum levels, so as to maintain only the minimum temperature required by constant-temperature items. The paragraphs below on weather compensators deal with this aspect.

Specialist controls contractors

22.12 Most control systems do not perform as envisaged at the design stage. This is the result either of changes in the system or, more probably, of inadequate commissioning coupled with ill-defined or changing user requirements.

22.13 Controls specialists can help, but they need an overall picture of all the control loops that may affect the particular local system control under consideration. Retrofit measures have the benefit of hindsight and this gives the contractor, and indeed the client, the ability to assess all the actual needs of the system.

Temperature scheduling controls

22.14 Scheduling controls vary the distribution temperature according to general requirements, leaving the final adjustment to local controls, in order to reduce distribution losses.

Weather compensators

22.15 A weather compensator varies (or schedules) the temperature of distribution water according to the outside temperature. The effect of this is to reduce the output of heat emitters according to the outside temperature, in order to provide a match between emitter output and varying load. The simplest example is hot-water radiators, which give out less heat when the water is supplied to them at a lower temperature, as directed by the compensator system.

22.16 The minimum components for compensation are:

a. an outside-temperature detector;

b. a water-temperature detector (or other detector for any other distribution fluid);

c. a controller to generate signals to match the selected relationship of temperatures;

d. an actuator controlling a valve or damper to respond to the signals.

22.17 The temperature of the distribution medium varies with the outside temperature. The slope of the line and the position of the normal line can generally be set at the controller.

22.18 The output of the controller can be used to act upon the distribution fluid in the following ways:

a. by a modulating control valve to mix water directly to the desired temperature (for example, air-heater batteries, zones of hot-water radiators etc);

b. by a sequence controller to turn plant on and off as required (for example, boiler sequencing);

c. by a steam throttling valve (for example, steam-to-hot-water calorifiers).

22.19 It should be noted that the highest temperature that the central-plant distribution system can produce sets the upper limit to local distribution, whilst the lowest temperature at which emitters give any useful output sets the lower limit. Many compensators take neither limit into account, and separate controls may be required to cater for these maximum and minimum requirements.

22.20 In the cases where an evaluation has shown that it is not economic to connect constant-temperature equipment to a separate distribution system, the use of a compensated distribution with a fixed minimum temperature can be considered (for example, where hot-water calorifiers are on the same distribution main as low-temperature hot-water heat emitters).

22.21 Some compensators may have an additional input from a room-temperature detector which resets the distribution temperature. This feature creates a closed control loop, which materially improves the overall control, and should always be adopted where practicable. A room thermostat (as opposed to a temperature sensor) can often be used to approximate to this control action by switching the compensating controller between normal operation and the set-back line (see also night set-back, below).

22.22 Both the above are very effective in providing early-morning boost in intermittently occupied residences.

Time switching

22.23 Local plant, distribution systems, pumps and fans can often be switched off when no output is required. Although the following considerations are described in terms of heating, the same principles would also apply to cooling.

22.24 The temperature in a heated space will drop when the heat source is switched off. The Chartered Institution

of Building Services Engineers (CIBSE) 'Building Energy Code', Part 2 gives a prediction of the energy saving produced from the reduction in space temperature during the off periods.

22.25 It is important to note that the local plant, distribution system and emitters must be capable of reheating the space at design conditions within a small proportion of the cycle time. This demands more output than the steady-state condition. Most existing installations were designed with a margin of excess capacity to cater for this, but the size of this margin is rarely known and will need recalculation.

Time-switch facilities

22.26 Time switches vary widely in facilities and price. A complete range, from electric-motor-driven 24-hour single on/off switches, to electronic, digital, programmable, 365-day, multiple-circuit, solid-state-switched devices, is available. The cost of multiple local time switches quickly approaches that of small-scale energy-management systems.

22.27 Switching facilities to be considered include:

- capability to switch a complete system off for a season (summer/winter switching);
- capacity for switching off at weekends (day omit) on seven-day time switches;
- small variation of on and off times according to season (solar-dial time switches);
- capacity for coping with special events like public holidays, British Summer Time, temporary power switch-off or failure (spring or battery reserve);
- local control for an extended on period. Advancing a time switch to stay on throughout an off period is more wasteful than locally extending the on period. This is done by using an additional local countdown interval timer that extends the on period for a pre-selected short time;
- frost protection during off periods. Additionally, the effect of frost controls, especially where these produce the full effect of an on period, should be considered. The location of the items most likely to freeze should be carefully identified and frost protection controls located accordingly.

Combined time and temperature scheduling

Night set-back control

22.28 This is usually offered as an additional facility to weather compensators described above. The effect is to reduce the distribution temperature during the night period to a preselected amount below normal daytime operation.

Optimum start control

22.29 If the supply to an area is reduced or turned off for a night or weekend period, it will need to be returned to normal operation at the end of this period.

22.30 The energy saved during the off or set-back period depends upon the length of the period, and this is therefore maximised if the time to return to normal operation is as short as possible. Since this, in turn, depends upon the distribution temperature, some compensators have a boost facility which keeps the distribution temperature to a fixed amount above the normal compensated temperature during the warm-up period.

22.31 The use of night and weekend set-back, where a lower internal temperature is acceptable, reduces the losses from the building during the set-back period by reducing the temperature differential across the building fabric. Generally, the energy saving is not as great as would be achieved by a complete shut-down.

22.32 The CIBSE 'Building Energy Code', Part 2, gives a prediction of the energy saving produced by optimum start controllers.

22.33 The length of the warm-up period can be adjusted by the use of an optimum start control in accordance with the building need.

Individual emitter and room controls

Thermostatic radiator valves (TRVs)

22.34 TRVs are probably the most successful invention for saving energy from heating systems. Ideally, every emitter should be controllable with respect to time and local temperature. Self-acting thermostatic radiator valves control output with respect to room temperature and involve only minor modifications to fit. Any evaluation should take into account the probability of their adjustment by room occupants (limiting devices, locking devices and anti-vandal covers are available).

Room-control options

22.35 Zoning of emitters so that groups of rooms are controllable by zone control valves and zone temperature controllers may involve alteration to distribution pipework. Large zones, which include many different functional needs or building layouts, can present severe problems. For example, vertical zones even in relatively low-rise accommodation will potentially introduce over-heating on the higher floors.

22.36 The economic balance between individual rooms as zones and larger areas of buildings would normally have been made at the time of original distribution-system installation, but this should not preclude its re-evaluation. It is more likely that recent developments of electronic controls, for example, electrically heated (extra-low-voltage wired) thermostatic radiator valves, would produce a better room control more cheaply than alterations to pipework to extend the number of zones.

Building management systems (BMS)

22.37 These systems can combine all the known control regimes and, even in the smallest institution, can be very cost-effective. Their use is very strongly recommended and the modern distributed systems, especially those with individual room control, can be extremely helpful in conserving energy. They also have the ability to supplement features concerned with building security and fire protection. **BMS fire-alarm monitoring should, however, only be used in addition to a dedicated fire-alarm control panel**.

22.38 The effectiveness of the control aspects of a BMS should not undermine its use as a data-collection and energy-management tool. Too often, systems are sold and installed on the basis of the limited control regimes offered for the main boilerhouse or a sophisticated ventilation plant. These limited systems, however laudable, are generally less effective in overall energy-management terms than a system which is generally more expensive and uses a large number of sensors to monitor the building's performance and prepare temperature profiles of the energy consumed. The most effective systems will have large numbers of temperature sensors and sub-meters.

Description of systems

22.39 BMS are management tools for the real-time control and monitoring of a building, its local environment and operation. They are always computer-controlled and usually provide additional software for evaluation of the collected and supplied data to provide performance statistics, which can be presented in tabular and graphical form.

22.40 Simple energy-management systems provide a similar service, but may be restricted to energy matters alone. They may not allow users to capitalise on the wider issues which, in the long term, will result in better management of a variety of services and therefore have more benefit than energy-efficiency improvements alone.

22.41 Most modern systems utilise proprietary computer equipment but use bespoke software which is peculiar to the manufacturer's system. Early generations of equipment provided all of the computing power from a central computer, but the modern distributed systems provide control and monitoring at local level and use a central computer only for supervision and evaluation.

Outstations

22.42 All systems include at least one outstation which provides a local control and monitoring function of a number of different points (usually a binary number of 64 or 128), being either analogue or digital in nature. Self-contained outstations have facilities for the input and output of the control and monitoring protocols, for example, on/off times and set temperature levels etc. Audio-visual alarms are usually provided. Logged data is stored and retrieved by interrogation and, in addition, it may be possible to connect a standard printer for the preparation of regular reports and reports on demand. Most systems connect to a proprietary personal computer (PC) enabling users to develop reports using their favourite spreadsheet or word-processing packages.

22.43 Various forms of hardware communication are used to connect outstations together and the main control station, for supervision, to the outstations. They usually utilise the serial type of interconnection locally. On small sites, or where main engineering service routes exist, a hardware connection in the form of a twisted pair or coaxial cable can be used. Systems covering a wider area will also use the public-switched telephone network (PSTN) through modems. With the introduction of new digital exchanges, both within hospitals and by telephone companies, an increase in the use of direct telephone data-transmission systems is to be expected.

Communications protocol

22.44 Whilst, in the main, the hardware alternatives can provide a satisfactory solution, the question of communications protocol is more complex and much still needs to be done to establish transmission protocols and data formats. These are usually peculiar to the system, although the use of proprietary computers has brought about some continuity. Such standards will only be brought about by closer user and manufacturer collaboration. The open systems interconnection (OSI) strategy (ISO 7498) will lead to benefits in this direction in the longer term.

22.45 Currently, the connection of different information systems is possible only with the full collaboration of the system supplier.

Selecting a BMS

22.46 A brief description of BMS is given above. In-depth descriptions are given in NHS Model Engineering Specification C54 – 'Building management system', NHS Estates, 1993.

22.47 Consideration of the selection of a BMS follows. Two broad areas are covered. These are:

a. strategic considerations;

b. amplification of the most important factors in the procurement and installation of systems.

Strategic considerations

22.48 A system should be purchased to satisfy the immediate needs of the organisation and its buildings. Initially, this will often be for energy-efficiency purposes, but it is important to consider the wider and longer-term implications of fire protection and estate security. For this reason, flexibility, extensibility and access to the software source code is imperative for its development and to allow for the eventuality that a company ceases to trade.

22.49 Additionally, a system should be capable of being interfaced with other information technology systems for estates and other hospital matters. The most obvious of these is the Works Information Management System (WIMS), but this is only the forerunner of many other systems. Treasurers etc are already using systems which may need to have some input from a real-time BMS. Initially, these interfaces will not usually entail much, but they need the software ability to reformat data to meet their requirements. These can then be downloaded, either via floppy disks or by hardware connections, to the relevant computer equipment.

22.50 The use of OSI is to be recommended, but this is not yet a definitive standard and will not provide full compatibility of hardware or software.

22.51 It is also necessary to emphasise the importance of being able to link systems to each other so that a sub-set of data can be provided back to a computer higher in the management chain. It can also simplify and make more efficient the provision of energy returns etc, required by the UK health departments.

Important factors

22.52 Whilst the importance of BMS cannot be understated, their need should be fully understood if the right decisions are to be made with regard to their procurement. In themselves they do not save money except where they provide a better utilisation of manpower. All the savings attributed to a BMS could be provided by other non-integrated equipment, such as optimum start controllers, but at, perhaps, a higher overall cost for the same comprehensive service. Such savings as they make directly are estimated to be no more than 7% and probably much less.

The role of the energy management

22.53 The main benefit of BMS to energy and building efficiency generally is in the provision of management information that can be acted upon. BMS complement managers; they do not replace or usurp them.

22.54 Local-authority guidelines have suggested that an energy manager is required for every £1M spent on energy. This is a good guide, but not many organisations in the NHS are of this size so it is important not only to identify the energy-management responsibilities, but also clearly to define the time that is to be spent on energy and environmental issues.

22.55 A BMS without energy management is next to useless at saving energy. Energy management without a building management system can be very effective but can have considerably increased effectiveness with a BMS. The important message here, therefore, is that energy management alone is more effective than any BMS and **should come first**.

Contract procedures and commissioning

22.56 Normal contract procedures should be employed in the procurement of equipment, and compatibility problems should not be used to restrict competition. Generally, Encode refers to retrofit practice and by far the biggest market in the NHS is in this field. However, there are significant problems with the installation and commissioning of BMS in new hospitals. If possible, the installation of supervisory equipment should be delayed.

22.57 It is important to provide adequate funding and communication facilities for the future installation of BMS once the building is commissioned, and to provide intelligent outstations where appropriate.

Establishing and developing a system

22.58 The only way to establish the requirements of a management system is by use and development. One installed at the outset will often be selected on the basis of very uncertain requirements. Indeed, this argument can be extended further. Those who have had the most immediate benefit from their systems are usually those who have had them installed on a staged basis, starting with one or two outstations and extending the system to cover more and more of the existing hospital site.

22.59 The adoption of this procedure is to be recommended, because it not only provides a more satisfactory and cost-effective procedure, but also enables staff to be adequately trained as the system is installed, rather than have them faced with a bewildering array of new technology which, in many cases, will not be fully utilised and will provide a psychological barrier to staff training. The only essential prerequisite in a new hospital is

a clear idea of the main cable routes or the provision of any fixed wiring required.

Justification

22.60 The Government is committed to information technology and the UK health departments' view is that good management cannot be achieved without the necessary information. These systems are essential in the collection and evaluation of the complex data involved.

Training

22.61 Some training is essential and suppliers of bespoke systems should provide this as part of their contract. Once the system is in use and can be operated with some degree of competency, much benefit will be achieved from experience through use and from regular short sessions with the suppliers. With moves towards standardisation and commonality with WIMS, training should become less difficult and the establishment of national user groups more fruitful.

Building management features

22.62 Even the smallest systems feature a range of techniques which have been tried within the NHS and the following are seen to be applicable to the smaller properties within the service. Different manufacturers use different names for these features so each one is simply described with an example of its use.

Fixed time control

22.63 The switching of a piece of equipment on and off at fixed times each day. Each piece of equipment can have its own time programme or share a programme with other equipment. A different set of times can be supplied for each day of the week with up to, say, five switchings (five on and five off) a day, which can be independently selected. This feature might be used to control the power supply to electrically heated food trollies or kitchen ventilation fans.

Optimum start- and stop-time control

22.64 This feature is similar in flexibility to the previous feature, but allows for an automatically calculated preheat time to be added to the start time. It is useful with intermittent heating systems where a variable preheat is required to allow for different start-up conditions. The optimum-stop facility will switch a heating point off before the end of the occupancy period such that the temperature is allowed to fall to the acceptable minimum at the end of the occupancy period.

Temperature monitoring/control

22.65 The monitoring of the temperature of a room, pipework, boiler, freezer, blood refrigerator etc can be accomplished. If the monitored temperature goes above or below preset limits, an alarm is indicated. A temperature monitoring point can be linked to the switching of a piece of equipment so that, for example, a heating valve is closed when the temperature exceeds the control level.

Status monitoring/logging

22.66 The monitoring of the status of a piece of equipment can be provided. For example, the system could monitor whether a heating pump is switched on or off. If so desired, the turning on or off of a piece of equipment can cause an alarm to be indicated. A monitoring point can be linked to a piece of equipment controlled by the system. In this way it is possible for the system to check if its commands have been obeyed. If the command is not obeyed, an alarm is indicated.

Frost protection and night set-back

22.67 If no heating is required in a building outside normal working hours, it is normal to protect the building and its contents from frost or condensation damage by monitoring a minimum temperature in the building. If desired, the system can monitor a building and activate the heating at a selected temperature and hold the building at that temperature. It is possible to do this from a temperature sensor within the building or, if necessary, by detecting the outside temperature.

22.68 In the case of 24-hour occupied areas, it may be desirable to reduce the temperature at night (in wards, for example). In this case it is possible to hold a selected lower temperature during this period.

Outside-air-temperature shut-off

22.69 With some methods of heating control, the boiler is able to cycle on and off even when it is not likely to be required. With British weather it is not always possible to decide to turn off a boiler in summer. This feature will turn off a boiler or other heating equipment once the outside air temperature exceeds a selected figure. This allows an automatic shut-down of the system (even in autumn or spring) when it is not required.

Reporting and logging

22.70 If a BMS is to be a useful tool to enable managers to examine and improve the engineering services in a building, it must provide comprehensive reporting facilities. All systems will give detailed reports of their actions and the state of equipment and sensors connected to them, a feature only normally limited by the scope of the system and the number of sensors. Depending on the hardware

chosen, signals from other sensors, such as pressure transducers, differential pressure transducers etc, can be accepted either for monitoring or as a control signal.

Simple operation

22.71 The importance of the user-friendliness of a system cannot be over-emphasised. If a system is to be fully utilised, the setting up and operation must be simple and easy to understand and implement.

22.72 All alarms and reports should use the point names given by the user and the reports should be given in plain English text without the need for short, unintelligible abbreviations.

Support and reference material

Chartered Institution of Building Services Engineers
Calculation of energy demands and targets for the design of new buildings and services: (a) Heated and naturally ventilated buildings. CIBSE Building Energy Code Part 2. Chartered Institution of Building Services Engineers (CIBSE), 1981.

NHS Model Engineering Specifications
National Health Service Model Engineering Specifications, Electrical Volume 2. **Section C54 Building management system**. NHS Estates, 1993.

Energy Efficiency Office Energy Technology Support Unit (ETSU)
Energy management systems, Energy technology series 1. Energy Technology Support Unit (ETSU), Energy Efficiency Office, 1986.

Property Services Agency
Building management systems (Standard Specification (M&E) No 15). Property Services Agency, 1986. ISBN 0861771478.

Contents

23.1 Introduction *page 131*

23.8 Monitoring and targeting *page 131*
- 23.10 The approaches available
- 23.11 Choosing the right system
  - 23.15 Flowline analysis
  - 23.17 Regression analysis

23.19 Energy-efficiency measures *page 132*
- 23.19 Philosophy
- 23.21 Wash house
  - 23.21 Water recovery
  - 23.22 Heat recovery
  - 23.25 Electricity
- 23.27 Conditioning plant
  - 23.27 Tumble dryers
- 23.32 Finishing equipment
  - 23.32 Tunnel finishers
  - 23.33 Calenders
  - 23.35 Electricity

Support and reference material *page 133*

23.0 Laundries

Introduction

23.1 This section acquaints those with responsibility for the management of energy use in laundries with the principles of energy efficiency appropriate to fabric care. Monitoring and targeting are particularly appropriate to this area and some duplication of guidance given elsewhere in Encode is inevitable.

23.2 In most laundries, the energy used accounts for the second highest cost – the highest cost being for labour. Even in linen-hire operations, it is usually the third highest. It is often regarded as a fixed cost, which cannot be reduced. A modest 10% energy saving (and there are few sites where this is not possible) for a site, where energy accounts for 5% of production costs and the profit is 10% of turnover, would increase profits by 4.5%. For a site with a turnover of £1M a year this amounts to a saving of £4,500. To increase profits by the same amount would otherwise require a £45,000 increase in business.

23.3 Experience has shown that savings of 20% to 30% are achievable at many sites, within a payback period of two years. It is often possible to save 5% to 10% by good housekeeping measures, even without capital investment.

23.4 In many cases there can be indirect benefits associated with energy-efficiency improvements. Examples include increased productivity, a better working environment, improved quality of work and longer textile life. Conversely, reduced energy consumption is often a side-effect of changes made for other reasons. In either case, the indirect benefits can make the difference between a profitable project and one which breaks even. They should be carefully costed at the planning stage.

23.5 Technology changes and fuel prices vary, so energy-efficiency measures need to be reviewed at regular intervals. A potential project which was not cost-effective 18 months ago may well be so now.

23.6 Effective monitoring helps to:

a. identify when wastage is occurring;

b. assess the potential for savings;

c. provide a means of quantifying the savings actually achieved.

23.7 This, in turn, helps to justify future investment decisions. The use of the 'Energy monitoring and targeting system' computer program (Enmats) is commended for this purpose, as is the Encost procedure which ranks the cost-effectiveness of the procurement of new plant and equipment. See Encode 1, Section 6.

Monitoring and targeting

23.8 Monitoring involves more than simply recording the energy usage of the laundry department. There can be benefits from monitoring individual machines, as is done in some continental laundries. Energy measurement alone is of limited value and the recorded consumptions require yardsticks for comparison. These comparisons could be with past performance, another site, the workload during the period etc.

23.9 Monitoring enables trends of energy usage to be identified, as well as sudden deviations from the normal pattern, indicating a need to investigate changes. It also allows the effect of energy-efficiency measures to be quantified. Monitoring is most valuable when consumption is compared with an appropriate target. Targets can be either particular to a site or process or industry norms.

The approaches available

23.10 The two different techniques used in the fabric care industry are described below. The powerful and thorough flowline method can give excellent results. It requires detailed work to set up and will only work if production is monitored in sufficient detail. The alternative, regression analysis, technique is far easier to instigate, and does not require a computer once the initial system analysis has been carried out. However, this method provides less-detailed information.

Choosing the right system

23.11 The best method for a particular site depends on the energy bill and the time investment available.

23.12 For small sites with few processing routes, the time and expense of flowline analysis cannot be justified and regression analysis is appropriate. Unit dry-cleaning shops come into this category.

23.13 Very large, complex sites, with a wide diversity of different processes and categories of work and equipment, should also use regression analysis – at least to start with. A great deal of effort is required to set up an accurate flowline spreadsheet and production monitoring would almost certainly need to be improved. For the intermediate sites, with perhaps 30 to 50 categories of work processed

using standard equipment, flowline analysis should be the first choice.

23.14 The advantages and disadvantages of the two systems are discussed below.

Flowline analysis

23.15 Some advantages of the flowline approach are:

- no need for manual calculations;
- "what if" questions can be answered;
- the system can be readily extended to a full flowline costing system;
- suitability for the incorporation of a bar-code system for automated production monitoring and target generation;
- degree-day information is unnecessary, unless a high level of sophistication is required;
- it is not based on historical data, and can respond to any changes made;
- as many fuels as required can be targeted separately, for minimal effort;
- graphs can be readily plotted on the computer.

23.16 Some of the disadvantages are:

- a computer with spreadsheet software is required;
- considerable time and effort are required to set up an accurate spreadsheet;
- detailed production monitoring is required;
- a computer-literate person must be available to make changes as necessary;
- production figures have to be keyed in each week/month (unless they are already available from a bar-code system).

Regression analysis

23.17 The advantages of the regression analysis approach include:

- no requirement for a computer where the periodic regressional activity is done externally;
- no requirement for consultant intervention once the regression equation has been produced;
- no requirement for detailed production monitoring;
- savings or losses each week or month are simple to calculate.

23.18 The disadvantages include:

- manual calculation is required each week/month;
- expert help to produce the regression equation will probably be needed every year or two;
- the predicted energy consumption cannot be calculated accurately until degree-day figures are available. This is less of a problem if degree days are recorded at the site;
- it is based on historical data and cannot take account, in advance, of major changes such as the introduction of an extra shift or the purchase of new equipment;
- "what if" questions cannot be answered.

Energy-efficiency measures

Philosophy

23.19 Most steam-heated laundries will generate more excess low-grade heat than can be conveniently re-used, because of the characteristics of steam as an energy-transfer medium. While some heat recovery is possible (see below), the principal aim is to conserve as much energy as is reasonably practicable.

23.20 Most energy-conservation measures are interdependent. The choice of energy-conservation equipment and cost appraisal has to take into account all the relevant factors. For example, attention should be given to the possibility of increased maintenance requirements and to fluctuating energy costs. The options for steam and hot-water boilers are described in Section 11.

Wash house

Water recovery

23.21 Water recovery, by recycling the rinse water from washer extractors, is a proven means of reducing water usage. It is inherent in batch-continuous tunnel washing systems. Total water recovery from effluent is a recent innovation and is expected to recover approximately 80% of the water. This system has yet to be proven and indications are that chemical balance in the system is crucial. The payback period is protracted at present, but the increasing costs of water and sewerage services could make the system viable.

Heat recovery

23.22 Heat recovery via heat exchangers from hot effluent discharge is standard practice. It can be used on all types of machines. Care should be taken to determine the viability of any composite scheme combining tunnel washers with washer extractors, particularly where dedicated washer extractors are used to launder infected work. The temperature of recovered hot water should not

exceed 38°C if it is to be used for the first wash. (A higher temperature may cause stain-setting on the dirty linen.)

23.23 Heat-recovery systems are available with various designs, efficiencies and running costs.

23.24 Heat recovery from flash steam can be the most effective means of energy saving. The recovered heat can be used to service other washing plants where two or more batch-continuous tunnel washing machines are used in conjunction with storage calorifiers. The most cost-effective method should be assessed at the design stage of any project.

Electricity

23.25 Soft-start motors will prevent high peaks on start-up of machinery. The efficacy of power-factor correction should be assessed on individual machines or for the plant as a whole, to determine the most cost-effective system.

23.26 Washer extractors should be electrically interlocked to prevent high peak-demand surges coinciding.

Conditioning plant

Tumble dryers

23.27 Tumble dryers are the largest energy users in the laundry. Savings on energy usage can be made by recirculation of the hot moist air before exhausting to atmosphere. This ensures full moisture saturation of drying air and improves the thermal performance.

23.28 Condense cooling takes the condensate from steam to the main heater battery through a primary heater battery. It is then returned to the normal condensate-return pipework. This method provides an air preheat, but does not reduce the total energy use. However, it will mitigate any flash-steam loss.

23.29 Heat exchangers of the crossflow type are currently the most versatile and viable form of energy saving. They preheat the air before passing it through the tumble heater battery and then into the drying compartment.

23.30 End-point detectors monitor the humidity and/or the temperature during the tumble-drying process and switch off as soon as the required conditions are reached. They also incorporate a cool-down device to prevent spontaneous combustion and to allow handling.

23.31 Gas-fired tumble dryers are cost-effective where there is already an on-site gas supply. They reduce the amount of steam usage by reducing or eliminating the tumble-dryer steam requirement. Care should be taken to avoid local overheating during the process cycle, especially on contra-rotation as the momentary pause can cause local scorch marks. Evaluation of gas-fired tumble dryers should include comparison of the capital and revenue costs and consideration of the type of fabric to be processed. (An airless tumble dryer, which is claimed to save energy on steam usage by utilising the heat in the already hot linen, is to be tested by the Energy Efficiency Office.)

Finishing equipment

Tunnel finishers

23.32 Tunnel finishers have similar attributes to tumble dryers and use the same energy-saving devices, including the airless concept.

Calenders

23.33 Calenders are high energy users. Calender hoods/canopies reduce radiated heat loss and have a useful energy-saving function. The energy savings will vary from machine to machine.

23.34 Thermal fluid is an alternative to steam-heated calenders. While it can produce operational and capital cost savings, the operational temperatures are critical. This medium is not suitable for all laundries. Its typical employment would be in laundries with large amounts of flatwork, minimal workloads of shaped garments or tunnel finishing, or in laundries having small washing machines.

Electricity

23.35 The most cost-effective measure for power-factor correction for individual machines that have a poor power-factor is to have a stepped power-factor correction on the whole installation. Soft-start motors will assist in reducing high peaks on stop/start electric motors.

Support and reference material

Encode 1
Enmats.
Encost.

Energy Technology Support Unit (ETSU)
Energy conservation in laundering (GPG 78). Energy Technology Support Unit (ETSU), 1993.
Energy Technology Support Unit (ETSU)
Building 156
Harwell Laboratories
Didcot
Oxon
OX11 0RA
Telephone 0235 436747

Strategic Guides
A strategic guide to water and sewerage policy. NHS Estates, 1993.

Contents

24.1 Introduction *page 137*

24.5 Load profiles *page 137*

24.6 Cook-chill systems *page 137*

24.8 Energy wastage *page 137*

Support and reference material *page 137*

24.0 Catering

Introduction

24.1 Detailed design advice for catering departments is given in Health Building Note (HBN) 10 – 'Catering', and Engineering Data Sheet EC3 – 'Energy conservation, excessive and uncontrolled heat losses in kitchens', also gives useful advice.

24.2 At the design stage of a new or refurbished hospital catering department, a fuel strategy that can cope with a failure of one of the supplies is necessary. The cooking equipment used will therefore usually be of a mixed variety where possible, using gas, electricity or steam where available.

24.3 Traditionally, certain processes have used steam for the indirect heating of food, such as boiling pans, water boilers, tilting kettles, and for direct heating by steaming ovens and high-speed steamers. Gas-fired and electrically powered catering equipment that sometimes generates steam as an intermediate heat source has been developed for all of these applications.

24.4 Electricity, the most expensive and environmentally damaging fuel, is also used for the storage, preparation and distribution of food and drinks. In recent years, there has been a considerable increase in the use of vending machines and microwave cookers for casual meals, both within and away from the catering department. It is important to account for these when determining electricity demand and assessing the efficient use of energy.

Load profiles

24.5 The overall levels of consumption and load profiles for kitchens are very much dependent upon the type of kitchen (conventional or cook-chill) and the availability of alternative fuels. Displacing central steam generation by wet-heating arrangements may have major implications for energy consumption in hospital kitchens, particularly with regard to food preparation and dish washing.

Cook-chill systems

24.6 The energy efficiency of a cook-chill arrangement compared with a conventional system is debatable. Beyond the basic cooking, there are additional loads associated with food chilling, chilled plating areas, refrigerated storage and regeneration. These additional loads are invariably electrically powered and it is likely that the overall NHS electricity consumption has increased considerably as a direct result of cook-chill.

24.7 The retrofitting of cook-chill systems or their provision in new premises should be very carefully weighed, particularly in the light of their implications for electricity consumption.

Energy wastage

24.8 Major energy wastage in kitchens, particularly of electricity, occurs where equipment, such as ovens, hotplates, grills etc, is left on continuously or when not required between cooking periods. Heated trolleys have, in some instances, been left on continuously throughout the day and night. The installation of simple time-switch control, through a relay, will give a very short-time payback.

24.9 Considerable savings can therefore be achieved by good housekeeping, and such routines should be encouraged (see Section 10). One study over a calendar month gave a saving of 28% of all fuels at a large district hospital.

24.10 Whether or not energy managers have access to a building management system (BMS) (see Section 22) they should make full use of sub-metering in this department (see Section 11).

Support and reference material

Health Building Notes (HBNs)
Catering department (HBN 10). DHSS, HMSO, 1986. ISBN 0113210264.

Engineering Data Sheets
EC3 Energy conservation, excessive and uncontrolled heat losses in kitchens. DHSS, 1980.

Contents

25.1 The energy market *page 141*

25.3 Coal *page 141*

25.6 Oil *page 141*

25.7 Natural gas *page 141*

25.11 Electricity *page 141*
- 25.12 Background
- 25.14 Second-tier customers

25.18 Renewable sources *page 142*
- 25.20 Wind-driven turbines
- 25.22 Solar panels
- 25.24 Conclusion

Support and reference material *page 142*

25.0 Fuel purchasing

The energy market

25.1 The energy market is continually changing. Following the privatisation of the gas and electricity supply industries, the purchasing of energy has become an increasingly complex process, although there is greater choice of supplier.

25.2 The NHS Supplies Authority (established in 1991) provides a purchasing service to the NHS. This enables those responsible for fuels to make informed decisions about the energy (gas, oil, coal and electricity) to buy – how, when and from whom. Nevertheless, health authorities and NHS trusts are free to negotiate their own local contracts. In Wales, however, fuel contracts, including those for electricity, have been negotiated by the Procurement Directorate of the Welsh Health Common Services Authority.

Coal

25.3 Although the use of coal continues to decline, more than 90 NHS hospitals still use it as an energy source and the NHS consumes some 214,000 tonnes a year.

25.4 Changes in the coal market have led to the emergence of a variety of suppliers, in addition to British Coal. Imported and blended coals are also available.

25.5 When entering coal contracts, it is important to establish that the contractor has the technical backup to ensure that suitable coal mixes are provided. Prior to entering a contract, "trial coal" should be burnt in the boilers to establish a satisfactory mix.

Oil

25.6 For a long time, oil purchasing in the NHS has been undertaken in a commercial environment. The NHS Supplies Authority buys oil from more than a dozen companies using both spot- and fixed-rate purchasing strategies.

Natural gas

25.7 British Gas is the major supplier of natural gas. It offers both firm and interruptible gas contracts. However, independent gas suppliers are now entering the market, although they use the same pipework as British Gas. Natural gas will not be available in Northern Ireland until 1997.

25.8 Any premises consuming more than 2500 therms (73,200 kWh) a year can buy their gas from an independent supplier. The independent suppliers must all receive official authorisation from the Office of Gas Supply (OFGAS) before they can sell to end users. A current list of authorised gas suppliers is available from OFGAS.

25.9 OFGAS is the Government Department that regulates British Gas to ensure that it complies with its statutory obligations under the Gas Act 1986. OFGAS also authorises independent suppliers to use British Gas pipelines and the British Gas transmission system, ensuring that these companies conform with safety provisions. The pricing and operation of the British Gas transmission and storage system is also regulated by OFGAS.

25.10 Health authorities or NHS trusts interested in discussing the terms and conditions of contracts, or wishing to obtain pricing information, should contact suppliers directly. The services of an energy consultant or broker may prove valuable. The NHS Supplies Authority arranges contracts on behalf of its customers for both firm and interruptible gas supply.

Electricity

25.11 From April 1994, NHS hospitals which have a demand of more than 100 kW will be free to buy their electricity from any licensed supplier. Greater choice will necessitate a more thorough understanding of the market and electricity usage patterns at individual hospitals, in order to maximise purchasing effectiveness. In Northern Ireland, hospitals with a demand of more than 1 MW are free to contract with any licensed supplier (this figure is expected to be revised to 100 kW). There is no pooling system, however, and all electricity generated in Northern Ireland is sold to Northern Ireland Electricity (NIE), who are also responsible for all metering and data collection. They sell electricity via bulk supply tariffs with added transmission and distribution use of system charges. The Northern Ireland Regional Regulator is actively seeking to develop competition.

Background

25.12 The majority of customers buy electricity from the local Regional Electricity Company (REC). From April 1994, organisations that have a site demand greater than 100 kW may buy electricity directly from another supplier if

they wish. The trading of electricity outside the local REC franchise is known as the "second-tier market". The sellers are called "second-tier suppliers" and the consumers "second-tier customers".

25.13 Trading in electricity in England and Wales is carried out via the pool. Arrangements governing the operation of the pool are set out in a contract between all the pool members (the Pooling and Settlements Agreement). Generators bid to generate electricity to meet demand within each half-hour period. RECs and second-tier suppliers buy that electricity for onward sale.

Second-tier customers

25.14 Customers planning to take supply from a second tier supplier are responsible for ensuring that certain basic services have been provided:

a. they should appoint a meter operator who will fit a "Code 5" or "Code 3" meter to record consumption in half-hourly intervals;

b. the meter operator must fit a meter and appropriate communications so that the meter can be read remotely by a second-tier agent;

c. the meter operator must obtain the approval of the host (REC) to install the new Code 5/Code 3 meter using the existing current transformers (CTs) and voltage transformers (VTs), where appropriate;

d. the host REC should also be willing to use the new meter to calculate bills;

e. additionally, the host REC must also be willing to use the new meter for calculation of the distribution use-of-system charge when their new supply contract starts.

25.15 The Office of Electricity Regulation (OFFER) regional offices can provide advice on appointing meter operators.

25.16 Customers have to pay for the operating/maintenance services of a meter operator. If the meter operator is also the supplier, the costs may be included within the supply charge. All suppliers are charged for each of their customers' metering systems where the maximum demand exceeds 100 kW. The charge is made in respect of all metering systems, not just those customers who take supply from second-tier suppliers.

25.17 The meter operator has to install communication equipment for second-tier sites. The appropriate telecommunications link (BT line, Paknet or other) will connect the customer and the second-tier agent.

Renewable sources

25.18 The bulk of the electricity supplied in the UK is derived from burning fossil fuels (the least-efficient fuel-to-energy conversion process). The balance, in the main, comes from renewable nuclear and hydro-electric sources.

25.19 The increasing concern with the damage done to the global environment by the burning of fossil fuels, together with their finite nature, has helped to focus attention on renewable fuel sources for electricity generation. The fuels for centrally generated electricity are largely a matter for the generating companies. However, hospitals generating power on site to meet some (and perhaps in future, all) of their loads may, as technology develops, have opportunities to use renewable fuels. Two of many possibilities, wind-driven turbines and solar panels, are examined briefly below.

Wind-driven turbines

25.20 Wind-driven turbine technology is an area of considerable development and such a plant has been installed in the second low-energy hospital, Wansbeck General Hospital at Ashington, Northumberland. Initial trials indicate that it is performing well and the electricity it generates will provide a useful supplement to the hospital's consumption.

25.21 Wind-driven turbines are not without their problems, however. An adequate and regular "supply" of wind is an obvious essential which is by no means universally available. Many commercial wind-farms have encountered serious complaints about the noise generated by their plant. There is also the question of producing a worthwhile output from the generator sets. Research and development work is continuing, however, and may lead to a more generally useful product.

Solar panels

25.22 Solar panels are essentially banks of photo-electric cells which convert radiant solar energy to electricity. They have an obvious requirement for a minimal level of solar radiation. So far, solar panels have produced power outputs which are too inefficient to warrant serious consideration for large-scale use.

25.23 Another type of solar panel contains an array of capillary tubes containing slow-moving streams of water. These again absorb radiant solar energy and the warmed water is used to supplement the user's hot-water requirements. A very extensive area of panels (usually roof-mounted) would be required to make any worthwhile impact on a hospital's hot water requirement. A few trials in the NHS have, so far, produced disappointing results.

Conclusion

25.24 It should be stressed that the technologies described above are in their relative infancy. The exploitation of renewable energy sources is inevitable and, as equipment develops, will provide attractive options to meet energy demands. See also Section 15, Heat pumps.

Support and reference material

NHS Supplies Authority
NHS Supplies Authority
Apex Plaza
Forbury Road
Reading RG1 1AX
Telephone 0734–595085

Common Services Agency (CSA) for the Scottish Health Service
CSA Supplies Division
Trinity Park House
South Trinity Road
Edinburgh EH5 3SH
Telephone 031–552 6255

Office of Gas Supply (OFGAS)
Office of Gas Supply (OFGAS)
Stockley House
130 Wilton Road
London SW1V 1LQ
Telephone 071–828 0898

Gas Consumer Council – Scotland
A totally independent body with a broad remit for consumer complaints in Scotland who also act for OFGAS in Scotland.
Gas Consumer Council
86 George Street
Edinburgh
EH2 3BU
Telephone 031–226 6523

Office of Electricity Regulation (OFFER)
Hagley House
Hagley Road
Birmingham B16 8QG
Telephone 021–456 2100
48 St Vincent Street
Glasgow G2 5TS
Telephone 041 248 5917
42 Fountain Street,
Belfast BT1 5EE
Telephone 0232 311575

Contents

26.1 Introduction *page 147*

26.6 Investment appraisal *page 147*
- 26.9 Identification of measures
- 26.11 Outline evaluation
- 26.15 Selection of priority projects
- 26.18 Refinement of costs and savings
- 26.27 Sensitivity tests
- 26.32 Rechecking priorities

26.33 Calculation of financial parameters *page 149*
- 26.39 Undiscounted parameters
  - 26.39 Simple payback
  - 26.41 Gross return on capital
  - 26.42 Net return on capital
  - 26.43 Average gross annual rate of return
  - 26.44 Average net annual rate of return
- 26.45 Discounted parameters
  - 26.48 Net Present Value (NPV)
  - 26.49 Ratio of NPV to capital cost
  - 26.51 Annualised equivalent cost
  - 26.55 Internal rate of return
  - 26.58 Breakeven time
- 26.59 Sensitivities of financial assumptions

26.61 The proposal *page 153*
- 26.69 Background
- 26.72 Options
- 26.73 Recommended option
- 26.74 Recommended course of action

26.75 Re-submitting proposals *page 154*

26.79 Financing a project *page 154*
- 26.79 Brokerage schemes
- 26.82 Contract energy management (CEM) and "unconventional" financing

Support and reference material *page 155*

26.0 Investment and finance

Introduction

26.1 Energy extends to every facet of hospital life and its supply directly affects hospital performance. This section looks at:

a. the financial aspects of projects;

b. the preparation and evaluation of proposals;

c. assistance which may be available from outside the NHS, such as contract energy management (CEM).

26.2 Management has a duty to give serious consideration to energy-saving measures. They offer improved value for money and, in so doing, reduce the burden of overhead costs and release additional financial resources to its main priority, health service to the community. Measures to conserve energy, other than routine housekeeping, are likely to necessitate the commitment of resources and some costs in order to produce benefits.

26.3 Once an energy-saving measure has been identified, management should proceed to a financial appraisal in order to determine which project is a worthwhile investment and what its priority should be.

26.4 The full process of financial evaluation involves a number of distinct steps:

a. identification of energy-saving measures from an audit or survey;

b. outline evaluation of costs and savings for each measure identified;

c. selection of priority projects for further evaluation;

d. refinement of costs and savings data for priority projects;

e. sensitivity tests on key parameters and assumptions;

f. rechecking and confirming priorities;

g. calculation of the financial parameters for the priority projects;

h. calculation of sensitivities of financial assumptions;

j. preparation of detailed proposals for priority projects.

26.5 Once the project is validated, the question of financing the proposed measure arises.

Investment appraisal

26.6 Although the process above appears to be lengthy, apart from the preparation of detailed proposals for priority projects only the outline evaluation and refinement of costs and savings data for priority projects are significantly time-consuming.

26.7 The selection of priority projects and rechecking and confirming priorities are greatly assisted by using the Encomp or Encost computer programs (see Encode 1, Section 6).

26.8 The preparation of the proposal would have to be done in any case, but at the end of this process the right projects should have been identified and better defined, perhaps with a reduced cost or an improved optimised performance.

Identification of measures

26.9 Initial identification of energy-saving measures is most commonly the result of an energy audit or survey. This identifies areas in which savings can be achieved. It may or may not indicate the means to effect those savings, for example, the type of equipment needed or the specific modifications that need to be made. A survey ought to produce a number of areas or measures from which to choose what to do first.

26.10 It is important to bear in mind that, however good the survey, some areas of saving are likely to have been overlooked and these may emerge later to be added to the list. There are frequently a number of different ways in which energy savings in a particular area can be effected. It is important to include these other approaches in the initial stages, to ensure that the most cost-effective measures are considered.

Outline evaluation

26.11 For each measure, an outline appraisal of costs and savings should be made. This should be on the basis of the best information that can readily be obtained, without the need to obtain quotations at this stage. Cost information can usually be obtained direct from suppliers. Names and addresses of equipment suppliers are available in various directories. Useful directories are:

a. 'British Gas Directory of Energy-Saving Equipment';

b. 'Energy Efficiency Yearbook';

c. 'Energy World Yearbook'.

26.12 Equipment suppliers should readily be able to supply equipment costs and give an indication of installation costs, if any, on the basis of their experience.

26.13 The level of savings, for the particular building and application concerned, should be assessed as closely as possible. Account should be taken of fuel-conversion efficiencies in boilers, heaters and distribution systems and the current price of fuel. For example, in the case of optimum start controls, the savings should take into account the existing schedule for switching on heating plant and the difference in its efficiency when it is raising the temperature of the building or simply maintaining temperature.

26.14 Only where this information is not readily available should equipment suppliers' advertised claims be taken into consideration.

Selection of priority projects

26.15 The survey or audit will usually have shown up more areas for saving than there are funds available to implement immediately. The next step is to sift out a number of candidate projects for more detailed investigation, with a view to putting forward a smaller number of specific proposals.

26.16 This stage is greatly facilitated by use of Encomp/Encost. This has been adapted from a model developed by the University of Bath and modified by NHS Estates. Taking basic information on annual fuel savings, costs and project lifetimes and applying other criteria, such as benefits in terms of backlog maintenance, compatibility with fire regulations etc, it enables a list of measures to be given weighted scores and to be ranked in order of attractiveness.

26.17 The value of Encomp/Encost is that it enables projects that are sufficiently worthwhile for further investigation to be rapidly selected, and the significance of different selection criteria on the relative attractiveness of projects to be tested. It also takes account of some non-financial factors, such as compatibility with maintenance programmes. Where the savings for individual projects are mutually exclusive, Encomp/Encost can be set up to take this into account and produce modified ranking lists.

Refinement of costs and savings

26.18 The output of Encomp/Encost is a list of projects with their ranking scores, from which it should be clear which projects are potentially the most attractive as investments. These priority projects can then be examined in greater detail to confirm scope, costs, savings and timescale. This is the point where definition of costs is likely to require an equipment suppliers' quotation. It is also where any detailed calculation or measurement of current energy consumption and costs might be undertaken to establish potential savings.

26.19 Timescale is a key aspect of costs and savings. It is not only important to know how much a project will save but over what period. Investigation of the timing of both costs and savings is important in any large project for which capital expenditure might extend over more than one year. However, most energy-saving projects do not require a long construction period and evaluation of a timetable of capital costs can normally be dispensed with. This simplifies the evaluation of financial parameters for the priority projects.

26.20 Apart from the cost of the equipment itself, other costs which should be considered include:

- building alterations, civil engineering, excavation and land preparation;
- piping, cable laying, additional services such as water, electricity or telephones;
- removal and relocation of fixtures, fittings and furniture;
- replacement of damaged, broken, unserviceable or obsolete existing fittings or plant required before the new equipment is connected;
- hire of specialist equipment such as cranes, scaffolding etc;
- professional charges such as fees for consultants, architects or agents;
- installation costs, consumables and making-good walls, floors, roads, paths etc.

26.21 Amongst the savings, apart from the benefit due to reduced energy consumption, consideration should be given to:

a. increased or reduced maintenance;

b. the running costs of any additional machinery such as pumps, fans, compressors etc;

c. increased or reduced water charges;

d. increased or reduced labour costs.

26.22 The savings should be set out for each year of the project and care taken to determine how much of the benefits will genuinely accrue in the first year. If, in order to maintain savings, some extensive maintenance needs to be carried out in future years, this should be indicated as reduced savings in that year.

26.23 Strict attention should be paid to differentiation between capital and revenue costs. In general:

a. capital costs comprise expenditure made in one financial year from which a significant part of the benefit derives in future years;

b. revenue costs comprise (usually continuing) expenditure from which the principal benefit accrues during the financial year in which it is made.

26.24 Capital costs can be evaluated as one-off payments at the beginning of the project, except where allowance is made for major part replacement in the lifetime of the project (for example, engine replacement or overhaul in a small-scale combined heat and power (CHP) project). Any one-off payment that would otherwise have to be made if the project were not carried out should be included as a credit against the capital costs. If this expenditure would not have been incurred until later years, for example a controls project which obviates the need for a scheduled rewiring, its cost would be discounted as for revenue (see calculation of financial parameters, below).

26.25 Changes in revenue costs may constitute savings and should be evaluated for each year of the life of the project (without allowance for inflation). It is common for the savings to work out to be the same in each year, although this is not something which should necessarily be assumed.

26.26 In considering energy savings in buildings, the weather is a key parameter determining the level. The main measure of the weather is the degree day. For the purpose of project appraisal, the measure of degree days to be used should be the 20-year running average, where possible, and a correction factor applied to records of the past few years. This is straightforward. A graph should be plotted of the energy use against degree days. This should give a straight line which indicates a base load and a degree-day-related part of the energy consumption (see Encode 1, Section 2). The energy consumption for the 20-year average is obtained by multiplying the degree-day-related part of consumption, given by the slope of the graph, by the average degree days.

Sensitivity tests

26.27 In order to arrive at a complete definition of costs and benefits, it is often, indeed usually, necessary to make some estimates and compromises. These are of three main kinds:

a. estimates of costs or benefits made in the absence of firm data;

b. fixing of technical parameters as a basis of design of systems;

c. selection of plant and equipment by the "closest in range" principle.

26.28 It is insufficient to make the best estimate or select the nearest equipment. In each case the error or compromise could affect either the costs or the benefits and make the project appear falsely optimistic or unduly pessimistic. In some cases this will be more than in others. These effects will mostly not be important but in certain cases could be extremely so. The performance of the plant costs and benefits should be recalculated, substituting different values at the limit of likely ranges of any parameter which has been assumed or has been established as the result of any kind of compromise.

26.29 For example, a measure associated with space heating will usually be assessed on the basis of recent recorded consumption or the 20-year running-average temperature conditions. This should be compared with savings for the most severe and mild weather conditions over the past decade. This will ensure that the plant will cope with the most severe conditions and reveal whether the financial viability of the project depends on it meeting these extremes.

26.30 An example of fixing technical parameters is the selection of temperature parameters in heat-recovery or heat-pump applications. Acceptable output temperature is usually specified for heat pumps as the first design parameter and size will ultimately be determined by this. If the required size to meet this temperature falls between available sizes, selecting the larger size would increase cost but selecting the smaller size could seriously affect performance. The design and cost should be investigated for different temperature levels to determine the effect at the limits of acceptable temperatures.

26.31 Equipment suppliers usually specify equipment performance levels which they are prepared to guarantee. This normally leaves a margin over actual achievable performance. Sensitivity tests ensure that these margins are not compounded, eventually producing greatly oversized, costly and inefficient equipment.

Rechecking priorities

26.32 After refinement of costs and benefits, a project may have become more or less favourable as an investment. Encomp/Encost should then be run again to determine if this changes the priority rating or brings other projects into the reckoning.

Calculation of financial parameters

26.33 The financial parameters of a project are indicators which relate the costs, quantity and timing of the benefits from the project and indicate its value as an investment. There are several such parameters, simple payback for example. The key parameters are:

a. gross and net return on capital;

b. gross and net annual rate of return;

c. Net Present Value (NPV);

d. breakeven time and internal rate of return;

e. the ratio of NPV to capital costs.

26.34 Each indicates a different aspect of the relationship between capital cost, benefits and timescale. They are required in order to determine the impact of the project on the financial performance of the enterprise. All these financial parameters are calculated from the same basic information: the capital cost, the savings or revenue in each year and the time value of money.

26.35 The basic revenue and expenditure information required is a cash flow statement of the form:

Capital cost £55,000

Year	Net revenue
0	£10,000
1	£20,000
2	£20,000
3	£20,000
4	£20,000
5	£20,000
6	£20,000
7	–
8	–

If the net revenue should come out negative, this is conventionally written in brackets.
The year zero represents the year of installation. The entries in the revenue column represent the net revenue in each financial or tax year.

26.36 The lifetime assumed must be as realistic an expectation of the useful lifetime of the equipment as possible. For boiler plant this could be ten years, for a heat-recovery system it might be five. For an electronic system, where obsolescence is a consideration, it might be limited to four. If the project involves part modification of, or equipment added on to, already existing plant, such as replacement burners for a boiler or insulation of an existing building, the residual life of the plant being modified should be taken into account.

26.37 There are two sets of financial parameters, according to whether account of the time value of money is taken or not. Taking account of the time value of money is called discounting and the two sets of financial parameters are termed undiscounted and discounted.

26.38 It is also helpful to know those financial parameters for which the capital costs are deducted from revenue, termed "net" and those for which the capital costs are not deducted from revenue, termed "gross".

Undiscounted parameters

Simple payback

26.39 The simplest financial parameter is simple payback. Where the savings can be assumed to be the same in each year, the payback is simply obtained by dividing the capital cost by the annual savings, thus:

$$\text{Payback (years)} = \frac{\text{Capital cost}}{\text{Annual savings.}}$$

26.40 Where the revenue varies from year to year, the payback is obtained by interpolating the point at which the accumulated revenue equals the capital, thus:

Capital cost £55,000

Year	Revenue	Cumulative revenue	
0			
1	£10,000	£10,000	
2	£20,000	£30,000	by quarter
3	£20,000	£50,000	£55,000
4	£20,000	£70,000	£60,000
5	£20,000	£90,000	£65,000
6	£20,000	£110,000	

Payback period = 3.25 years

Gross return on capital

26.41 The total revenue over the life of the project divided by the capital cost expressed as a percentage, thus:

$$\text{Gross return on capital} = \frac{110{,}000}{55{,}000} \times 100 = 200\%.$$

Net return on capital

26.42 The total revenue over the lifetime less the capital cost divided by the capital cost expressed as a percentage, thus:

$$\text{Net return on capital} = \frac{110{,}000 - 55{,}000}{55{,}000} \times 100 = 100\%.$$

Average gross annual rate of return

26.43 The gross return on capital divided by the number of years in the lifetime of the project, thus:

$$\text{Average gross annual rate of return} = \frac{200\%}{6} = 33.3\%.$$

Average net annual rate of return

26.44 The net return on capital divided by the number of years in the lifetime of the project, thus:

$$\text{Average net annual rate of return} = \frac{100\%}{6} = 16.7\%.$$

Discounted parameters

26.45 The purpose of discounting is to take account of the time value of money; the fact that £1 promised for later, however firmly, is worth less than £1 which is available today. This takes account of the fact that the £1 today can be put to work whilst the £1 next year is waited for. The way in which this is conventionally taken into account is to apply discount factors which reduce the value of revenue which comes in future years (see Table 27).

26.46 Discount factors are calculated according to the formula:

$$\text{Discount factor} = \frac{1}{(1 + r)n}$$

where r is the discount rate expressed as a decimal and n is the number of years into the project.

26.47 Thus, for a discount rate of 10% over three years r is 0.10 and n is 3. The discount factor is $1 \div (1 + 0.01)^3 = 0.751$. Ordinarily these would be looked up in ready-prepared tables. The discount factors are applied by multiplying the revenue in each year by the factor for that year for the appropriate test discount rate, thus:

1 Year	2 Revenue	3 Discount rate 10%	4 Present value column 2 × column 3
0	(£55,000)	1.000	(£55,000)
1	£10,000	0.909	£ 9,090
2	£20,000	0.826	£16,520
3	£20,000	0.751	£15,020
4	£20,000	0.683	£13,660
5	£20,000	0.621	£12,420
6	£20,000	0.564	£11,280
Net total	£55,000		£22,990

Net Present Value (NPV)

26.48 The total in the present value column net of the capital cost, is an important indicator, the NPV. This is an indicator on which those who are concerned with investment decisions place more reliance than any other, because it both indicates the earning potential of the project and takes into account the time value of money.

Ratio of NPV to capital cost

26.49 This is also known as Net Present Value/Benefit Cost Ratio, sometimes shortened to NPV/K. This method has been added to Encomp. The NPV does not take account of the size of capital investment. To do so, it is common to calculate also the ratio of NPV to required capital, thus:

$$\text{Ratio of NPV to capital cost} = \frac{£22{,}990}{£55{,}000} = 0.418.$$

26.50 The higher the ratio, the more cost-effective the measure. A negative ratio is not cost-effective.

Annualised equivalent cost

26.51 There is one other discounted parameter, which is less often used, the annualised equivalent cost (AEC). This is particularly useful when projects with unequal lives are being compared. In effect, the AEC converts the NPV into an annualised payment. This is complex to calculate but comparatively simple with the help of tables published for the purpose.

26.52 Table 28 shows constant revenue that needs to be obtained in order to achieve a NPV of £1, that is, taking account of the diminishing real value of money. AEC calculation uses these factors to convert an NPV over the assumed life of the project back to an annual revenue.

26.53 For the example, the NPV for a discount rate of 10% is £22,990. The project life is six years. The factor, NPV to AEC over six years for a 10% discount rate, is 4.355. The AEC is therefore:

$$\text{AEC} = \frac{£22{,}990}{4.355} = £5{,}279 \text{ a year.}$$

26.54 The particular value of the AEC is in comparing projects with unequal lives where the ratio of NPV to capital cost is less reliable.

Internal rate of return

26.55 Government departments have a test discount rate which is to be used for all investment projects. Industrial and commercial organisations often work differently and, instead of adopting a test discount rate, calculate the discount rate which would need to be applied in order to achieve a NPV of zero over the life of the project. This is called the internal rate of return as it makes possible a further useful comparison between projects.

26.56 Its calculation is not difficult, but tedious. It is obtained by calculating the rates until the point is found at which between one discount rate and another the NPV turns from positive to negative. The internal rate of return then lies between these values, thus:

Discount rate	NPV
10%	£22,990
15%	£12,000
20%	£ 3,170
22%	£ 210
24%	(£2,650)

Internal rate of return = 22% approx

26.57 Because tables of discount factors cover only whole numbers of percentages, only an approximate answer is usually possible.

Breakeven time

26.58 This is essentially the payback period calculated using discounted benefits. It is used by Encomp/Encost where the simple payback method would give undue weight to very long-lived projects with long payback. Otherwise it is not normally used, the parameters based on NPV being preferred.

Sensitivities of financial assumptions

26.59 Before proceeding to presenting a full proposal, a sensitivity check should be made to determine the effect of financial assumptions on the project. This should include the effect of lifetime discount rate (if the test discount rate is not fixed or a change is imminent) and timing.

Periods until payment (years)	Discount rate									
	1%	2%	4%	6%	8%	10%	15%	20%	25%	30%
1	0.990	0.980	0.962	0.943	0.926	0.909	0.870	0.833	0.800	0.769
2	0.980	0.961	0.925	0.890	0.857	0.826	0.756	0.694	0.640	0.592
3	0.971	0.942	0.889	0.840	0.794	0.751	0.658	0.579	0.512	0.455
4	0.961	0.924	0.855	0.792	0.735	0.683	0.572	0.482	0.410	0.350
5	0.951	0.906	0.822	0.747	0.681	0.621	0.497	0.402	0.328	0.269
6	0.942	0.888	0.790	0.705	0.630	0.564	0.432	0.335	0.262	0.207
7	0.933	0.871	0.760	0.665	0.583	0.513	0.376	0.279	0.210	0.159
8	0.923	0.853	0.731	0.627	0.540	0.467	0.327	0.233	0.168	0.123
9	0.914	0.837	0.703	0.592	0.500	0.424	0.284	0.194	0.134	0.094
10	0.905	0.820	0.676	0.558	0.463	0.386	0.247	0.162	0.107	0.073
11	0.896	0.804	0.650	0.527	0.429	0.350	0.215	0.135	0.086	0.056
12	0.887	0.788	0.625	0.497	0.397	0.319	0.187	0.112	0.069	0.043
13	0.879	0.773	0.601	0.469	0.368	0.290	0.163	0.093	0.055	0.033
14	0.870	0.758	0.577	0.442	0.340	0.263	0.141	0.078	0.044	0.025
15	0.861	0.743	0.555	0.417	0.315	0.239	0.123	0.065	0.035	0.020

Table 27 Present value of £1

Years (N)	Discount rate									
	1%	2%	4%	6%	8%	10%	15%	20%	25%	30%
1	0.990	0.980	0.962	0.943	0.926	0.909	0.870	0.833	0.800	0.769
2	1.970	1.942	1.886	1.833	1.783	1.736	1.626	1.528	1.440	1.361
3	2.941	2.884	2.775	2.673	2.577	2.487	2.283	2.106	1.952	1.816
4	3.902	3.808	3.630	3.465	3.312	3.170	2.855	2.589	2.362	2.166
5	4.853	4.713	4.452	4.212	3.993	3.791	3.352	2.991	2.689	2.436
6	5.795	5.601	5.242	4.917	4.623	4.355	3.784	3.326	2.951	2.643
7	6.728	6.472	6.002	5.582	5.206	4.868	4.160	3.605	3.161	2.802
8	7.652	7.325	6.733	6.210	5.747	5.335	4.487	3.837	3.329	2.925
9	8.566	8.162	7.435	6.802	6.247	5.759	4.772	4.031	3.463	3.019
10	9.471	8.983	8.111	7.360	6.710	6.145	5.019	4.192	3.571	3.092
11	10.368	9.787	8.760	7.887	7.139	6.495	5.234	4.327	3.656	3.147
12	11.255	10.575	9.385	8.384	7.536	6.814	5.421	4.439	3.725	3.190
13	12.134	11.343	9.986	8.853	7.904	7.103	5.583	4.533	3.780	3.223
14	13.004	12.106	10.563	9.295	8.244	7.367	5.724	4.611	3.824	3.249
15	13.865	12.849	11.118	9.712	8.559	7.606	5.847	4.675	3.859	3.268

Table 28 Present value of £1 received annually for N years

26.60 For the example, a delay in the project which led to the loss of £10,000 revenue in the first year would reduce the NPV by (£10,000 × 0.909) = £9,090 if the lifetime were fixed at six years, a difference of 40%. If the loss in the first year could be carried through to the final year, it would reduce the NPV by (£10,000 × 0.909) minus (£10,000 × 0.513) = £3,960, a difference of only 17%. The former might happen if the savings were gained by the life of plant to which energy-saving equipment was being fixed. The latter would apply if the life were fixed by the equipment itself.

The proposal

26.61 Once the costs and savings of the most attractive projects have been evaluated, the final phase is to put them forward for funding. Whether the project finally proceeds rests heavily on the case made in the proposal document. It is essential that this is clear, concise, conveys exactly the decision required and contains all the information relevant to that decision.

26.62 Before going into details on the presentation of the proposal, it is worthwhile making a few points about the role of proposals.

26.63 In any enterprise, commercial or public sector, where there are areas in which financial performance can be improved, it is important that these can be brought to the attention of senior management. The usual means is by a proposal. With the range of business to which senior managers need to give attention, it is insufficient to make vague suggestions and expect them to respond. It is far more effective to present specific proposals which call for a decision to proceed with a particular project or not.

26.64 Any project which meets current criteria should be presented for a decision to be made. Even those which fall only marginally outside the cruder criteria such as payback should be presented in outline, so that potential interest can be assessed.

26.65 Where alternative approaches exist, the presentation should not choose between alternatives but should offer proposals on the alternatives, with recommendations where necessary, for senior management decision.

26.66 Finally, those making proposals ought not to feel themselves rejected if, after going through this stage, the project is rejected. Only when, out of a wide range of proposals, senior management is rejecting a proportion of viable projects, can it be said with certainty that the enterprise is making best use of its resources, given that it is investing at all. Only when presented with the full range of possible investments can senior management ensure they have a proper perspective on the available opportunities.

26.67 A suitable structure for a proposal would be:

a. background;

b. options available;

c. capital and other costs (undiscounted);

d. benefits (undiscounted);

e. financial parameters;

f. uncertainties and sensitivities;

g. non-financial factors;

h. recommended option;

j. comparison with key alternatives;

k. recommended course of action.

26.68 The requirements under each of these headings are largely self-evident. Some additional guidance follows.

Background

26.69 The background to the proposal should provide an easy introduction of the project and the area of energy use it deals with. It should state:

a. if the project involves a measure already widely used elsewhere;

b. if the project is to establish the savings that can accrue from a particular measure by applying it in one building with the intention of extending to a number of others;

c. if the proposal is for the first significant project in the programme.

26.70 In general, the background section should outline:

a. what the proposal is about;

b. the significance of the area of energy use being tackled;

c. whether the equipment concerned is well proven, proven but not in this application, or completely new;

d. the broad level of savings to be achieved.

26.71 For example, for a project which deals with energy losses through ventilation, the background section might begin:

> "There are two major causes of heat loss in hospitals. These are loss through the building fabric and through ventilation. The total costs of heating St Whatsit's Hospital are £*x*000 a year. It is estimated that *x*% of this is lost through these mechanisms of which half is accounted for by ventilation. High rates of ventilation are necessary because . . . However, excessive ventilation results in high energy costs through the unnecessary rejection of large volumes of heated air.

"This proposal is to install . . . to control the ventilation rate to ensure that the volume of heated air exhausted to the outside is kept to the minimum. It works by . . . This same system is already widely used in (another industry) and a similar system has been in operation at St Everybody's Hospital since 1983 where it has reduced heating costs by . . ."

Options

26.72 The main options from which the recommended project has been selected should be set out. It should be stated if the project was identified from an audit or survey. This strengthens the way the project is viewed because it conveys the idea that unless action is taken on the findings, the original audit or survey could be seen as a futile exercise. If the project has been selected from a "shopping list" run through Encomp/Encost, this should be made clear. It conveys the idea that this project is the most attractive, or one of the most attractive, of a range of projects that have been considered.

Recommended option

26.73 As complete details as possible should be given, including the names of equipment suppliers. Copies of tenders submitted should be provided, including those of alternative suppliers, as appendices. The timetable for installation, including any critical points, should be set out. For example, projects which require modifications to space heating need to be approved and undertaken before the heating season and projects which require substantial making-good may await later redecorating schedules.

Recommended course of action

26.74 The nature of decision required should be clearly stated. If all of the necessary information has been gathered, what is required is a decision to proceed with the project. However, it may be that a complex project needs further effort or expenditure to determine the costs, benefits or design. In such cases a proposal might be made on the basis of the best information available, the purpose of the proposal being mainly to seek approval to spend time and effort to develop the project and explore alternatives in more detail. This is especially useful for large projects, when it serves to alert senior management that a call for a large capital expenditure item, for which they need to budget, is imminent.

Re-submitting proposals

26.75 It is inevitable that, however good the projects may appear, a proportion will be turned down. This could be for a variety of reasons – lack of available investment funds, competition from investment needs elsewhere, latent plans for a change in the particular enterprise where the project may take place, or budgetary considerations.

26.76 Provided the project is properly conceived, its validity as a course of action will remain true. A project to replace a boiler by a more efficient heater is likely to remain a valid option while the boiler and the heating load exist. As circumstances, such as fuel prices, change, it may become an even more attractive option. As financial policy changes, the project could fall back within the limits set by economic criteria.

26.77 The proposal should be re-submitted, but only after re-examination through all the stages previously described and with any changes due to fuel cost, capital and installation cost, other benefits etc recalculated. With a knowledge of key areas of sensitivity, the main revisions can be made very rapidly.

26.78 Finally, any organisation has a period when business confidence or strictures of the financial year create a favourable climate for projects which can be put together and passed through approval procedures quickly. Energy-saving projects especially fall into this category, and a small portfolio of proposals (perhaps previously considered) that can be called up to order should always be maintained.

Financing a project

Brokerage schemes

26.79 Brokerage schemes involve an original outlay of moneys to set up a fund to finance one or several projects with varying payback periods (say one to eight years).

26.80 The savings achieved repay the original capital and interest payments on borrowed moneys and can provide capital for further schemes.

26.81 Such schemes can facilitate consideration of a total concept to realise the full energy potential, whereas funding only those with a fast payback often does not produce the full potential savings.

Contract energy management (CEM) and "unconventional" financing

26.82 CEM is an agreement with an outside company where an energy user has identified substantial opportunities for cost-effective measures for energy savings, but is unable to proceed through lack of expertise or capital.

26.83 CEM can range from the provision of expertise (short-term consultancy or longer-term energy management services) to the provision of services and the capital to finance the improvements.

26.84 The most common form of CEM is that offering improvements for which there is:

a. no initial cost, the contractor financing all capital expenditure (a big advantage to capital-starved energy users);

b. payment contingent upon the energy savings achieved;

c. considerable technical expertise added to that existing in-house;

d. "no" financial risks.

26.85 Where the capital cost of the assets is in excess of a specific figure stipulated from time to time by the Treasury, special consideration, guidance and approval by the Treasury is required.

26.86 Acquisition of capital assets or raising finance from the private sector may be justified if it offers better value for money than Exchequer capital, that is, that the taxpayer does not pay more for "unconventional" than for conventional (Exchequer) finance. Unconventional financing also has to fulfil other criteria, such as:

- rules under which public expenditure should not be increased, unless Government Ministers deliberately decide to allow it;
- schemes needing Treasury approval are most likely to be required to supply a full environmental-impact survey;
- schemes involving electricity generation are assessed to ensure consistency with the Government's aim of reducing public-sector involvement in the economy. That is, they will need to show substantial and tangible benefits (including those of energy efficiency) that could not be obtained by buying electricity from the trading pool or directly from an independent supplier. Furthermore, the scheme must not distort the market or damage the development of competition in the generation market;
- schemes which involve the export of more than 10 MW of electricity have special requirements as to the energy-user stakeholdings. The contractors' benefits must be proportional to their financial contributions.

26.87 Guidance on the subject and CEM is kept under review (the most recent, at the time of publication, were 'Guidelines for contract energy management in the public sector', published in February 1993 by the Department of the Environment, Energy Efficiency Office). Energy users considering such schemes should liaise with the appropriate finance division of their UK health department.

Support and reference material

Encode 1
Encomp.

British Gas
British Gas Directory of Energy-Saving Equipment. Sixth revised edition. Energy Publications, 1991. ISBN 0905332679.

Energy Systems Trade Association
Energy Efficiency Yearbook. Produced annually by the Energy Systems Trade Association (Telephone 0453 886776).

Institute of Energy
Energy World Yearbook. Institute of Energy, Energy Publications, 1992. ISBN 0902597353.

Department of the Environment Energy Efficiency Office (EEO)
Guidelines for contract energy management in the public sector. Department of the Environment, Energy Efficiency Office, 1993.

About NHS Estates

NHS Estates is an Executive Agency of the Department of Health and is involved with all aspects of health estate management, development and maintenance. The Agency has a dynamic fund of knowledge which it has acquired during 30 years of working in the field. Using this knowledge NHS Estates has developed products which are unique in range and depth. These are described below.

NHS Estates also makes its experience available to the field through its consultancy services.

Enquiries should be addressed to: NHS Estates,
1 Trevelyan Square, Boar Lane, Leeds LS1 6AE.
Tel. 0532 547000.

Some other NHS Estates products

Activity DataBase – a computerised system for defining the activities which have to be accommodated in spaces within health buildings. *NHS Estates*

Design Guides – complementary to Health Building Notes, Design Guides provide advice for planners and designers about subjects not appropriate to the Health Building Notes series. *HMSO*

Estatecode – user manual for managing a health estate. Includes a recommended methodology for property appraisal and provides a basis for integration of the estate into corporate business planning. *HMSO*

Capricode – a framework for the efficient management of capital projects from inception to completion. *HMSO*

Concode – outlines proven methods of selecting contracts and commissioning consultants. Reflects official policy on contract procedures. *HMSO*

Works Information Management System – a computerised information system for estate management tasks, enabling tangible assets to be put into the context of servicing requirements. *NHS Estates*

Health Building Notes – advice for project teams procuring new buildings and adapting or extending existing buildings. *HMSO*

Health Facilities Notes – debate current and topical issues of conern across all areas of healthcare provision. *HMSO*

Health Technical Memoranda – guidance on the design, installation and running of specialised building service systems, and on specialised building components. *HMSO*

Health Guidance Notes – an occasional series of publications which respond to changes in Department of Health policy or reflect changing NHS operational management. Each deals with a specific topic and is complementary to a related Health Technical Memorandum. *HMSO*

Firecode – for policy, technical guidance and specialist aspects of fire precautions. *HMSO*

Concise – software support for managing the capital programme. Compatible with Capricode. *NHS Estates*

Model Engineering Specifications – comprehensive advice used in briefing consultants, contractors and suppliers of healthcare engineering services to meet Departmental policy and best practice guidance. *NHS Estates*

Items noted "HMSO" can be purchased from HMSO Bookshops in London (post orders to PO Box 276, SW8 5DT), Edinburgh, Belfast, Manchester, Birmingham and Bristol or through good booksellers. Details of their standing order service are given at the front of this publication.

Enquiries about NHS Estates products should be addressed to: NHS Estates, Publications and Marketing Unit, Department of Health, 1 Trevelyan Square, Boar Lane, Leeds LS1 6AE.

NHS Estates consultancy service

Designed to meet a range of needs from advice on the oversight of estates management functions to a much fuller collaboration for particularly innovative or exemplary projects.

Enquiries should be addressed to: NHS Estates, Consultancy Services (address as above).

Printed in the United Kingdom for HMSO
Dd296821 3/94 C13 G3397 10170